Wireless World

RADIO AND ELECTRONICS

JAN. 1947
1/6
Vol. LIII. No. 1

IN THIS ISSUE: TELEVISION RECEIVER CONSTRUCTION

World Radio History

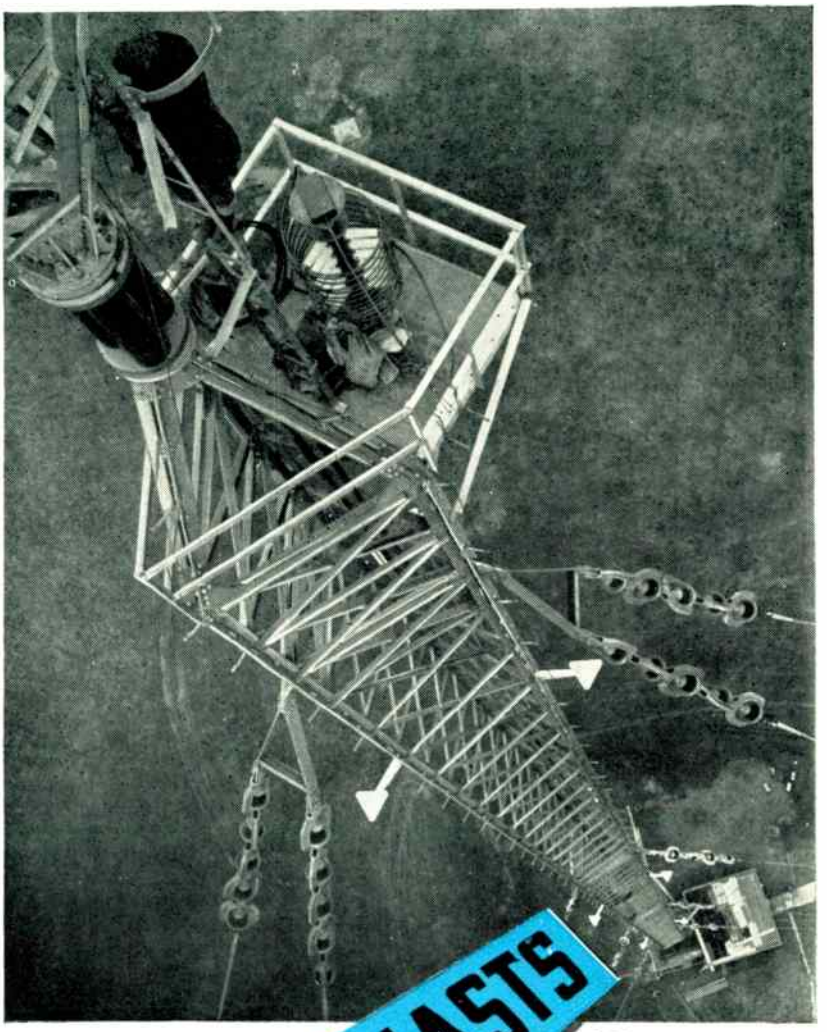

RADIO MASTS

B.I. Callender's

Fully insulated from earth this 500 feet aerial mast, designed and erected by B.I.Callender's for the B.B.C., is typical of the work we are doing on radio masts and towers in all parts of the World.

BRITISH INSULATED CALLENDER'S CABLES LIMITED
NORFOLK HOUSE, NORFOLK STREET, LONDON W.C.2

World Radio History

THE world-wide use of "AVO" Electrical Testing Instruments is striking testimony to their outstanding versatility, precision, and reliability. In every sphere of electrical test work they are maintaining the "AVO" reputation for dependable accuracy, which is often used as a standard by which other instruments are judged.

THE AUTOMATIC COIL WINDER & ELECTRICAL EQUIPMENT CO., LTD.
WINDER HOUSE · DOUGLAS STREET · LONDON · S·W·1 TELEPHONE: VICTORIA 3404/7

World Radio History

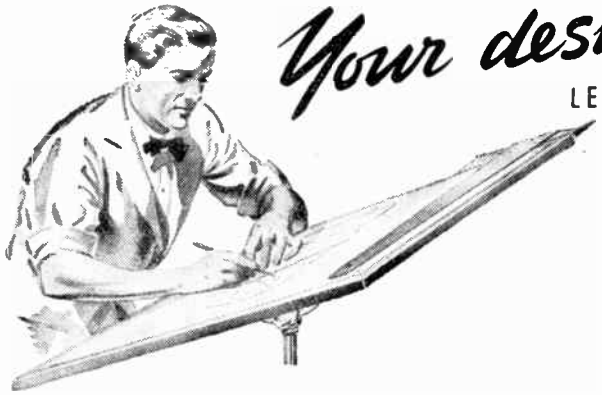

Your designs

LET US BRING THEM TO LIFE!

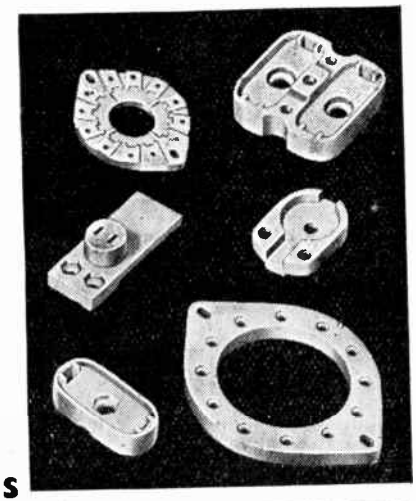

Made in Three Principal Materials

FREQUELEX
An insulating material of Low Di-electric Loss, for Coil Formers, Aerial Insulators, Valve Holders, etc.

PERMALEX
A High Permittivity Material. For the construction of Condensers of the smallest possible dimensions.

TEMPLEX
A Condenser material of medium permittivity. For the construction of Condensers having a constant capacity at all temperatures.

the most difficult problems solved by . . .

Bullers

BULLERS LOW LOSS CERAMICS

BULLERS LTD., 6, LAURENCE POUNTNEY HILL, LONDON, E.C.4
Telephone: Mansion House 9971 (3 lines) Telegrams: "Bullers, Cannon, London"

We don't sell Transformers "OFF THE SHELF."

There is nothing "ready-made" about SAVAGE Transformers. We build any model up to 5kVA to suit your exact requirements. This may mean a little extra trouble at first, but it is your guarantee that the finished article will fit into your production with the greatest possible efficiency.

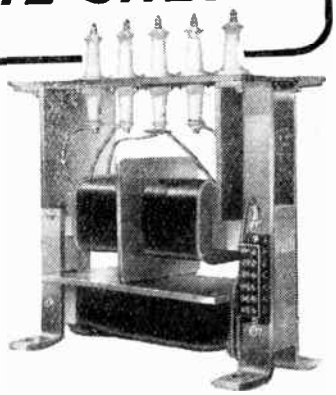

"PURPOSE-BUILT"
Savage TRANSFORMERS LTD.
51, NORTHGATE STREET, DEVIZES. Phone 536

Wharfedale W.12

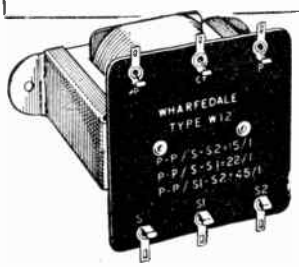

TRANSFORMER

Designed for use with speakers, up to 15 ohms impedance where the output does not exceed 10 watts.

Ratios: 45, 22 and 15 to 1, all centre tapped. Max. D.C. 80 m'amps.

Inductance 50 Henrys, no D.C.	Fixing
Inductance 20 Henrys, 25 m/a.	Holes
Inductance 8 Henrys, 50 m/a.	3¾in.
Inductance 5 Henrys, 75 m/a.	Centres.

Leakage Inductance .07 Henry.

WEIGHT 2 lbs. — PRICE **21/-**

Special Ratios to order at 4/- extra.

Made and Guaranteed by

WHARFEDALE WIRELESS WORKS
BRADFORD ROAD, IDLE, BRADFORD
'Phone: Idle 461 'Grams: "Wharfdel, Idle, Bradford."

World Radio History

THE STANDARD OF TECHNICAL EXCELLENCE QUALITY AND RELIABILITY

Dubilier Capacitors have been known and selected by Radio Engineers since the early days of radio. The development and extension of their range during the years has proceeded step by step with, and often in anticipation of, the progress of radio and electronics. The result is that today Dubilier Capacitors cover, with the highest degree of efficiency, the entire field in which Capacitors are used.

With the rapid growth of scientific knowledge during the past few years, important internal improvements have been effected in the Dubilier range of Capacitors. Many of these improvements are not always apparent until the Capacitors are actually in use, but their excellent performance gives final proof of the essential quality of these improvements.

MAKERS OF THE WORLD'S FINEST CAPACITORS

DUBILIER
CONDENSER CO. (1925) LTD.

DUBILIER CONDENSER CO. (1925) LTD., DUCON WORKS, VICTORIA ROAD, NORTH ACTON, W.3
Phone: Acorn 2241 *Grams: Hivoltcon, Phone, London.* *Cables: Hilvoltcon, London.* *Marconi International Code.*

D8

World Radio History

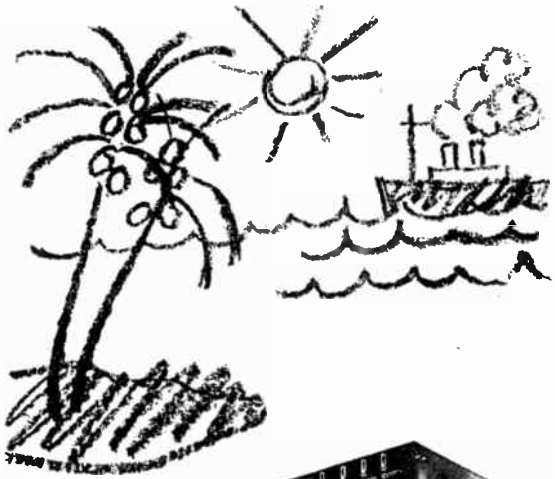

TYPE 5080 TAKES A HOT SPOT IN THE SOUTH PACIFIC . . .

If you have been exporting equipment to the Tropics you will know the immense difficulties in producing Transformers to operate efficiently under such conditions of heat and damp and you may give a sigh of relief when we tell you that those troubles are now a thing of the past. We are now producing Transformers vacuum impregnated with a specially developed compound which will withstand the most adverse tropical climates. A typical member of our 5080 series is shown above, wound for outputs of 400-0-400V at 150m/a 6.3V at 5a and 5V at 2a.

PARMEKO LTD. OF LEICESTER.
MAKERS OF TRANSFORMERS.

SENSITIVE VALVE Voltmeter

PRINCIPAL FEATURES

VOLTAGE RANGE
1 mV to 100 volts.

FREQUENCY RANGE
50 c/s to 250 kc/s.

ACCURACY
±5% of the actual reading.

INPUT IMPEDANCE
2 megohms.

ZERO SETTING
Stable and remains set on all ranges.

Type 378A

This instrument is now available from stock. Write for full particulars and specification. PRICE £75

FHL FURZEHILL LABORATORIES LTD
TELEPHONE ELSTREE 1137
BOREHAM WOOD HERTS

BSR

SOUND SYSTEMS USED

BSR

THROUGHOUT THE WORLD

BSR

BIRMINGHAM SOUND REPRODUCERS LTD
CLAREMONT WORKS, OLD HILL, STAFFS. TEL: CRADLEY HEATH 6212/3

LONDON OFFICE: 115 GOWER STREET, W.C.1. TEL: EUSTON 7515

M-W 88

World Radio History

WEBB'S Radio

Five & Ten Metre Converter

AS DESCRIBED IN THE CONSTRUCTIONAL ARTICLE IN THE EDDYSTONE SHORT WAVE MANUAL

NOW AVAILABLE *FROM STOCK* AS AN ASSEMBLED UNIT, TESTED AND GUARANTEED BY WEBB'S

A Frequency Converter that gives really efficient results on 5 and 10 Metres

The converter can be used in conjunction with any good super-het or 'straight' receiver, *and will improve the ten metre reception of even the finest communication receiver.* On five metres tests have shown results equal to specialised high-frequency receivers. The three Mullard Valves were developed during the war for H.F. work and have only recently become commercially available. Service personnel will recognise the EF54 and EC52 as specialised high-frequency valves known previously as the RL7 and RL16—and this applies also to the EF50.

No power pack is incorporated; an external source of power is necessary giving 6.3 volts 1 amp. and 200/250 volts 30 milliamps. The main receiver will often provide this small additional power; batteries or a separate pack can be utilised if desired. Actual frequency coverage of converter is 51.4 to 60.5 mc/s and 26.4 to 33.4 mc/s by plug-in coils. Simplicity of coil design makes other interesting H.F. ranges available by experiment.

5 & 10 METRE CONVERTER UNIT

assembled and tested (less valves) :			£10 10 0
VALVES Types EC52 ..	18/3		
EF50 ..	21/4		
EF54 ..	21/4 ..		3 0 11
			£13 10 11

AVAILABLE FROM IMMEDIATE STOCK. The inclusive price of £13.10.11 includes a copy of the Eddystone Short Wave Manual with full operating details.

USES VALVES TYPES: R.F. EF54
MIXER EF50
OSCILLATOR EC52
RECOMMENDED I.F. 1.6 Mc/s. (187.5 Metres)

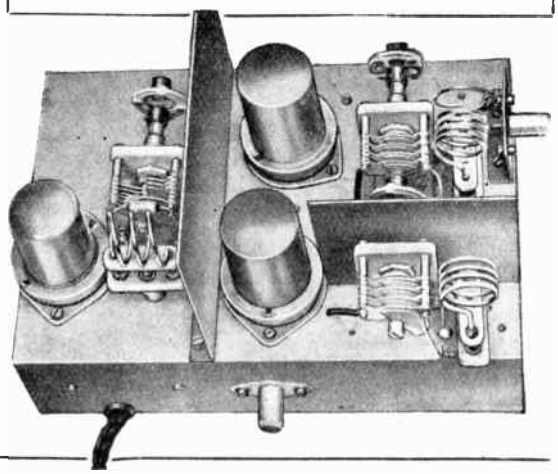

LATE ARRIVAL: 14 MC/s CRYSTALS by S.T.C. in evacuated glass mount. Good range of frequencies. From stock, each 35/-.

WEBB'S RADIO, 14, SOHO ST., OXFORD ST., LONDON, W.1
Phone: GERrard 2089
Shop hours 9 a.m.—5.30 p.m. Sats. 9 a.m.—1 p.m.
Midland customers can draw supplies from
WEBB'S RADIO, 41, CARRS LANE, BIRMINGHAM

World Radio History

The PIFCO ALL-IN-ONE RADIOMETER

tests everything electrical

RADIO, HOUSEHOLD APPLIANCES & MOTOR CAR LIGHTING ETC!

25/-

Ask your local Factor to show you one of these remarkable instruments and to put your name down on his waiting list.

"Cyldon"

Transmitting Capacitors

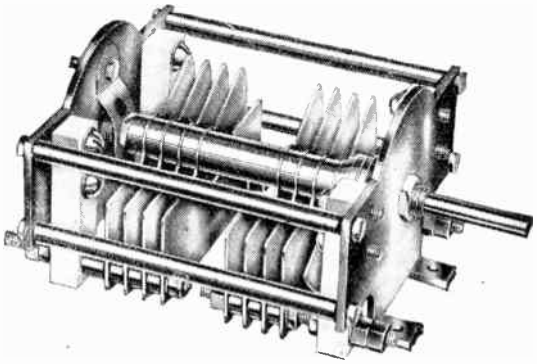

TYPE TRMSS

Max. Capacity	*List Price*
30 + 30 pF	£1 : 7 : 6 each
60 + 60 ,,	£1 : 10 : 0 ,,
80 + 80 ,,	£1 : 12 : 0 ,,
100 + 100 ,,	£1 : 17 : 6 ,,

Air Gap ·082"

SYDNEY S. BIRD & SONS, LTD.

Cambridge Arterial Road, Enfield, Middlesex.

'Phone: ENfield 2071-2. *Telegrams: "Capacity, Enfield."*

CELESTION

LOUDSPEAKERS

Chassis Diameters range from 2½" to 18"

Power Handling Capacities range from ·25 Watt to 40 Watt.

Celestion Limited
Kingston-upon-Thames
Telephone: KINgston 5656-7-8

World Radio History

TCC CAPACITORS

PAPER
ELECTROLYTIC
MICA
SILVERED MICA
CERAMIC

Capacitor Specialists for over 40 years

THE TELEGRAPH CONDENSER CO., LTD.
RADIO DIVISION
NORTH ACTON · LONDON · W·3 · Telephone, ACORN 0061

World Radio History

PERTRIX REDRESSED FOR PEACE

PERTRIX BATTERIES have emerged from the testing ground of war as more reliable, more efficient than ever before. You will soon see them in the smart new post-war pack shown above. It denotes the finest battery for radio use yet made.

★

HOLSUN BATTERIES LIMITED

137 Victoria Street, London, S.W.1.

P.I.A

R&A

Suppliers of Loud Speakers to Britain's foremost Radio Manufacturers.

REPRODUCERS & AMPLIFIERS LTD.
WOLVERHAMPTON. ENGLAND.

SIFAM RADIO SERVICING D.C. TEST SET Type R.T.10.

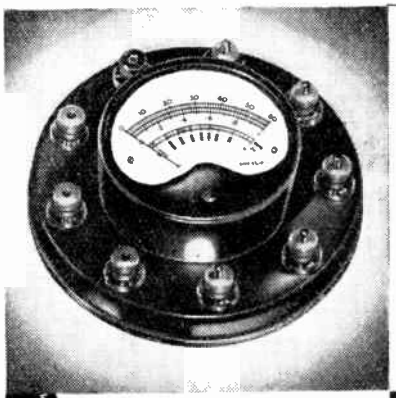

Designed with the latest movement this 3½" simplified test set has clear scale reading and 12 D.C. ranges: 100 mV (with ext. shunts) 2, 6, 120 and 300 volts, 1, 6, 600 mA, 6 amperres, 50,000 ohms, with 2000 at centre.

PRICE £6 0 0

22 years Specialized Experience

- 12 D.C. ranges
- No switches to go wrong
- Long clear scales
- Positive push button selection
- Easily serviced
- Designed to stand heavy overloads
- Accurate in *any* position
- 1000 Ω per volt

SIFAM ELECTRICAL INSTRUMENT CO. LTD., TORQUAY, DEVON

World Radio History

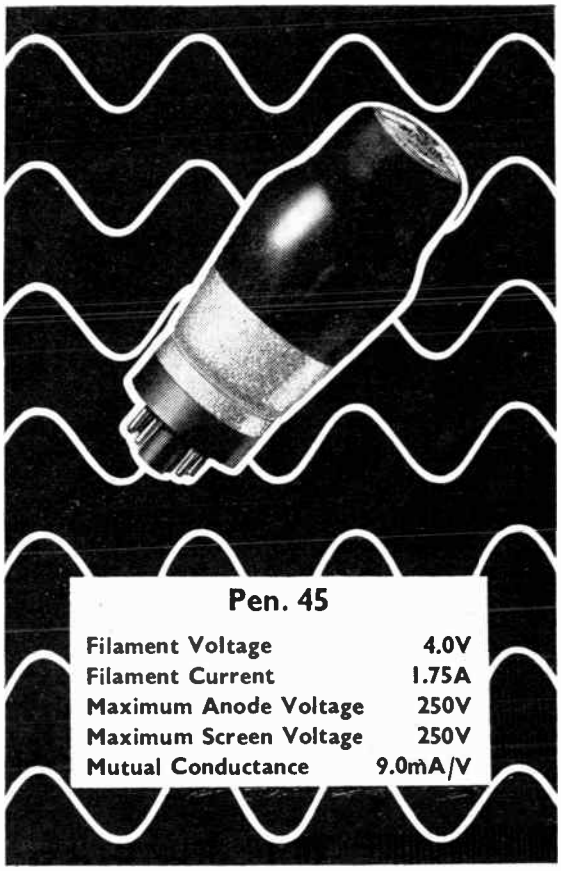

Pen. 45

Filament Voltage	4.0V
Filament Current	1.75A
Maximum Anode Voltage	250V
Maximum Screen Voltage	250V
Mutual Conductance	9.0mA/V

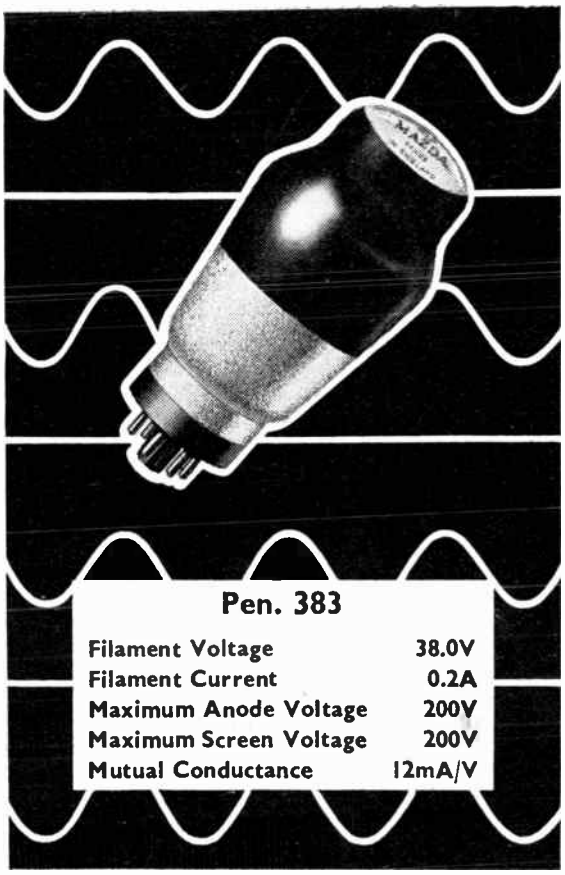

Pen. 383

Filament Voltage	38.0V
Filament Current	0.2A
Maximum Anode Voltage	200V
Maximum Screen Voltage	200V
Mutual Conductance	12mA/V

The Pen. 45 designed for use in A.C. Mains Receivers, and the Pen. 383 in AC/DC Receivers, are Beam Power Amplifiers.

Under normal operating conditions the Pen. 45 will give a Power Output of 4.85 watts and the Pen. 383 of 4.3 watts for 5% Third Harmonic Content and with the Second Harmonic not exceeding 5%.

MAZDA

RADIO VALVES AND CATHODE RAY TUBES

THE EDISON SWAN ELECTRIC CO. LTD., 155, CHARING CROSS ROAD, LONDON, W.C.2

R.M 16
B

World Radio History

HY-MEG

for modern impregnation

GIVES STABILITY IN INSULATION

More and more leading manufacturers rely on HY-MEG . . . . . *We will gladly advise you*

★ A copy of the recently printed Brochure "Stability in Insulation" will gladly be sent to those applying on Business Heading or Card and enclosing 2d. to comply with the Control of Paper (No. 48) Order, 1942.

LEWIS BERGER & SONS LTD. ***(Established 1760)*** **35 BERKELEY SQUARE, LONDON, W.1**
Telephone: MAYfair 9171

MANUFACTURERS OF INSULATING VARNISHES AND ENAMELS

EARTH FREE

& Silent as the Stars

Masteradio
VIBRATORPACKS
PROMPT DELIVERY NOW ASSURED
MASTERADIO LTD VIBRANT WORKS WATFORD HERTS

Miniature or Midget

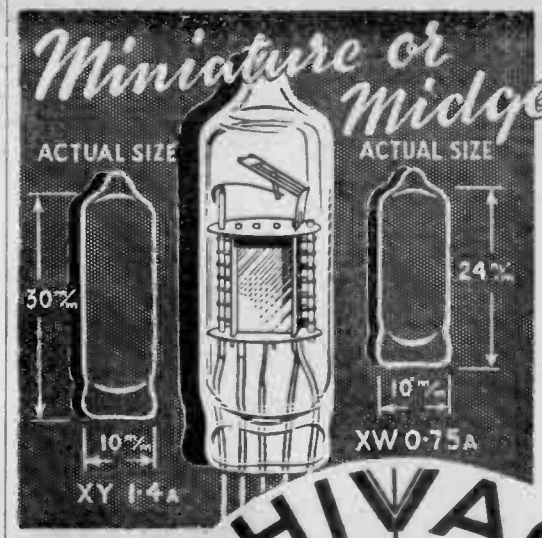

NEW TYPES FOR
MIDGET RECEIVERS
HEARING AIDS
METEOROLOGICAL INSTRUMENTS
ETC.

HIVAC
THE SCIENTIFIC VALVE
BRITISH MADE

HIVAC LIMITED Greenhill Crescent, Harrow on the Hill, Middx. *Phone* HARROW 0895

World Radio History

U.I.C Metallised Ceramics

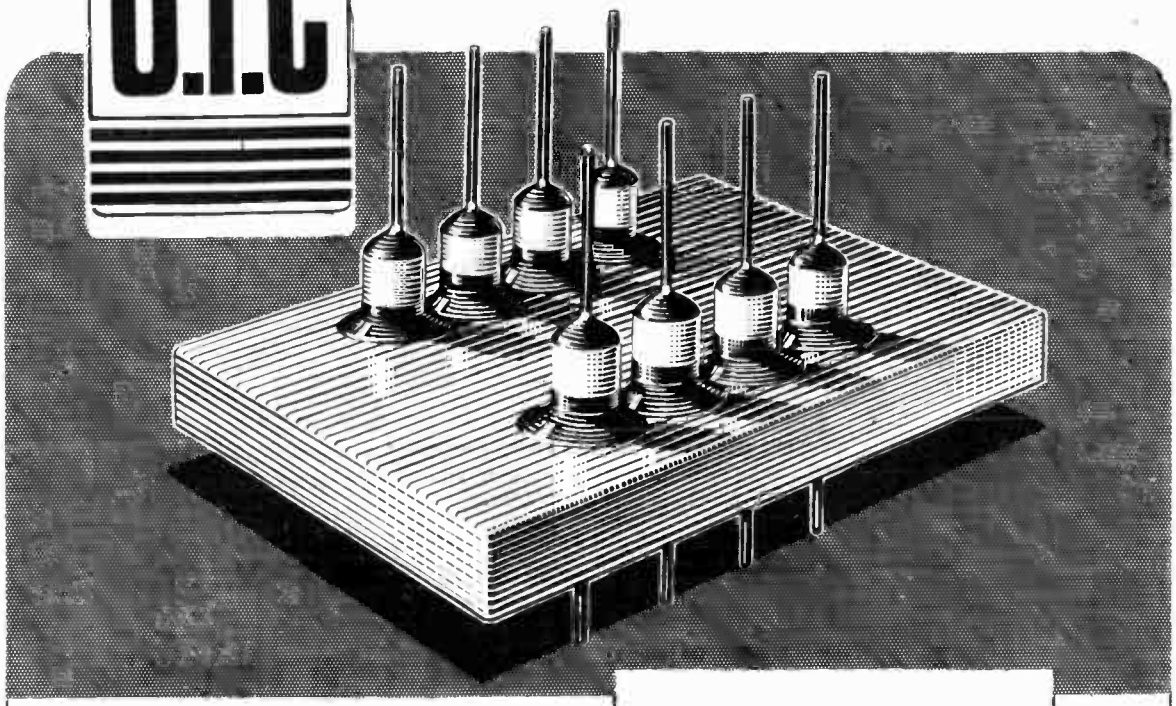

We specialise in the production of all types of Metallised Ceramic components—Hermetic Seals, Sealed Lids, Tag Boards, Bushes, Formers, etc. These are available in soldered, coppered or silvered finish, according to requirements. The suitability of any finish is a matter which we shall be pleased to discuss.

HERMETIC SEAL TYPE HS 421

Flashover Voltage over outside path 4.5 KVDC at 20° C. Flashover Voltage over inside path 3.5 KVDC at 20° C. Small size. Close assembly. Physically robust.

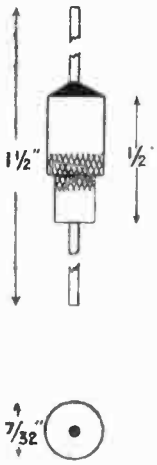

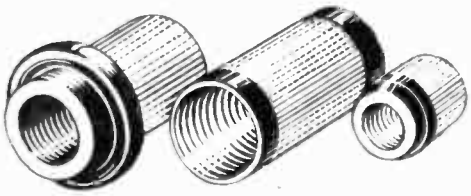

Components made to standard design or to customers' specific requirements. Write for details.

UNITED INSULATOR CO. LTD., OAKCROFT RD., TOLWORTH, SURBITON, SURREY

Telephone: Elmbridge 5241 (6 lines) *Telegrams: Calanel, Surbiton*

Unsurpassed In Ceramics

World Radio History

Operation Protection

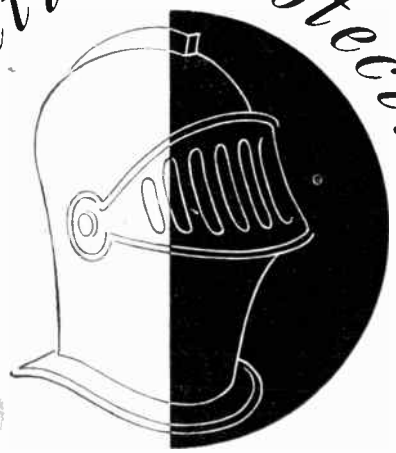

De La Rue Insulating Sleevings protect electrically, mechanically and methodically. Produced in diameters from 0·5 mm., in four types to British Admiralty and Air Ministry specifications — Varnished Cotton, Varnished Rayon and Rolled Silk. Wide range of single colours, stripes and multiple colours takes care of the most elaborate coding.

DELAFLEX INSULATING SLEEVINGS

De La Rue Insulation Limited

IMPERIAL HOUSE · REGENT STREET · LONDON W.1 · ENGLAND
Tel.: REGent 2901. Cables: Delinsul, Piccy, London

D.A.108 (46)

S.E.M. MINIATURE MOTORS

FOR special use in Indicating and Recording Instruments, S.E.M. engineers have designed and manufactured very dependable miniature electric motors.

The A.C. model can be used on 50 or 200-1,000 c.p.s. supply at 25-30 volts, and the D.C. model up to 24 volts. Both machines have a torque of ½-in. oz. and are capable of up to 10,000 r.p.m.

In common with all S.E.M. machines, these motors are manufactured to the highest standards of mechanical detail and have passed rigid inspection and tests.

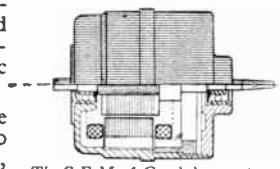

The S.E.M. A.C. miniature electric motor. Dimensions of motor body 1⅝" long by 1¼" diameter.

SMALL ELECTRIC MOTORS LTD.

have specialized for over 30 years in making electrical machinery and switchgear up to 10 kW capacity. They are experts in the design and manufacture of ventilating fans and blowers, motors, generators, aircraft and motor generators, high-frequency alternators, switchgear, starters and regulators.

A subsidiary of Broadcast Relay Service Ltd.

BECKENHAM · KENT

Manufacturers of
LOUDSPEAKERS
•
LAMINATIONS
•
SCREENS in RADIOMETAL
•
PERMALLOY
•
SILICON ALLOYS

ELECTRICAL SOUND & TELEVISION PATENTS LTD.
12, Pembroke Street, London, N.1. Terminus 4355
2/4, Manor Way, Boreham Wood, Herts. Elstree 2138

World Radio History

POINTERS FOR DESIGNERS

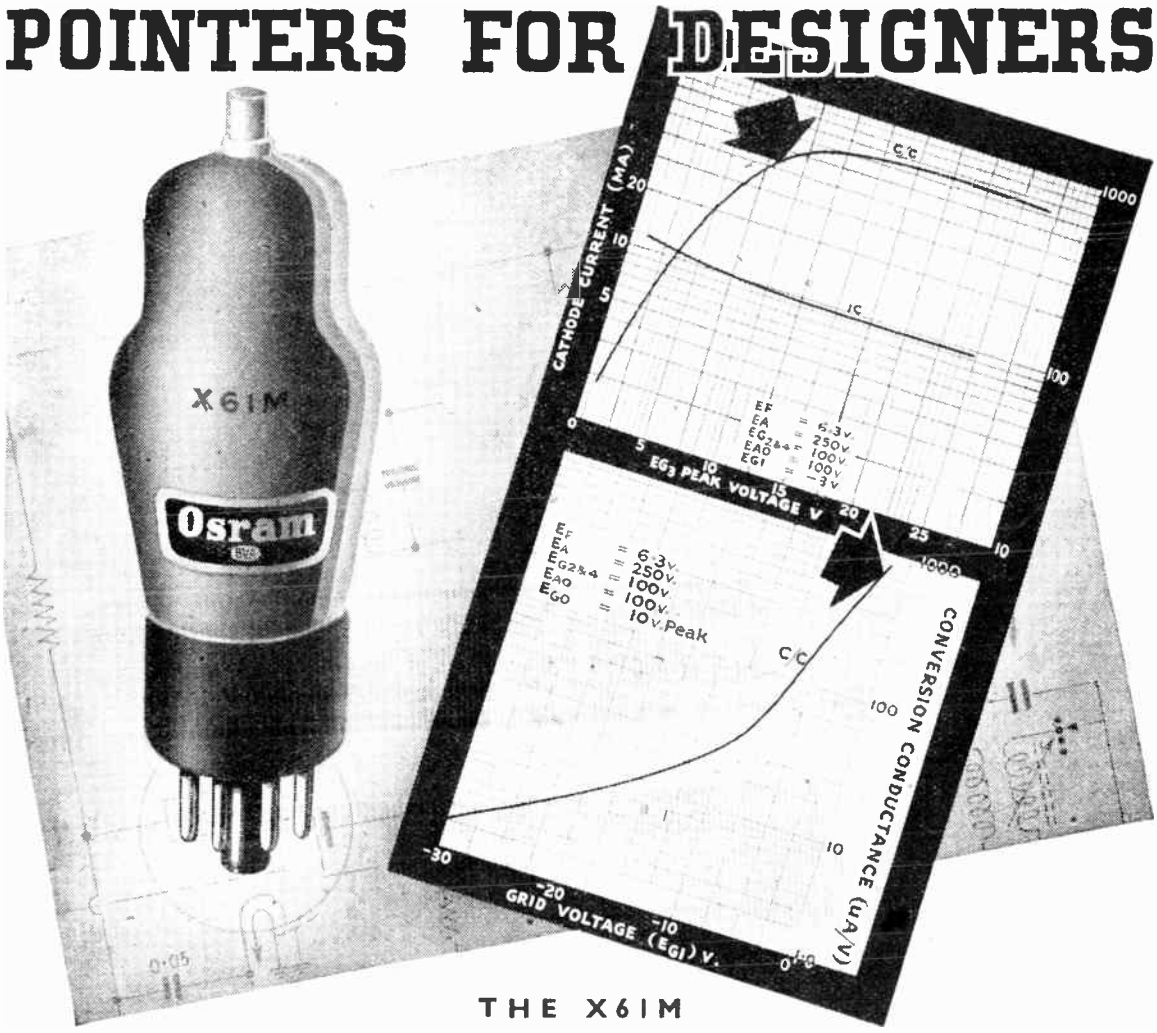

THE X61M

An indirectly heated 6.3v. frequency changer of the Triode-Hexode type, the OSRAM X61M is suitable for operation up to 60 megacycles per sec. (5 metres). Outstanding features include:—

- High conversion conductance for comparatively low cathode current, improving signal to noise ratio.
- Signal handling capacity is such that negligible distortion is apparent up to 5 volts R.M.S. on the signal grid.
- Negligible "pulling" when tuned anode oscillator is used, making ganging of tuned circuits easy.
- Control characteristic is designed to work in combination with KTW61 as IF amplifier, giving maximum control on both valves with negligible distortion.

A detailed technical data sheet is available on request.

Osram PHOTO CELLS | **G.E.C.** CATHODE RAY TUBES | **Osram** VALVES

Advt. of The General Electric Co. Ltd., Magnet House, Kingsway, London, W.C.2.

World Radio History

..tomorrow began yesterday...

Quality reproduction is the Goodmans' tradition established in a yesterday when a pioneering spirit and a policy of "best only" in craft and material brought achievements outstanding in Sound Reproduction. Truly a firm foundation for confidence that Goodmans will assuredly maintain their tradition in developments yet to come.

The 12 ins., illustrated, handles 15 watts of undistorted power.

FIDELITY EFFICIENCY

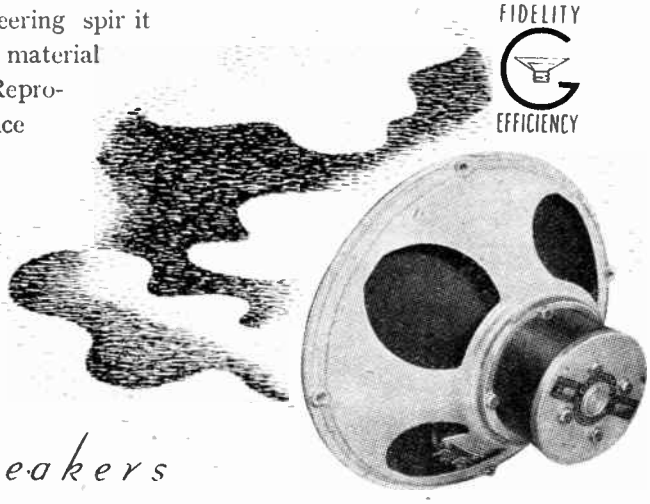

ERRATUM: *The 15-inch Speaker illustrated in our advertisement in the December issue is Type No. T10/1501/15, and not as stated in the advertisement.*

GOODMANS *Loudspeakers*

GOODMANS INDUSTRIES LIMITED, *Lancelot Road, Wembley, Middx.*

The Peak of Perfection!

in Radio Reception has been attained by the latest S. G. BROWN, Type K

MOVING COIL HEADPHONES

Where High Fidelity Reproduction is required such as for DX work, Monitoring and Laboratory purposes, etc., these precision-built Moving Coil Headphones will be highly appreciated.

Technical Details:

D.C. RESISTANCE—
94 ohms per pair

IMPEDANCE—
104 ohms @ 1,000 c.p.s.

SENSITIVITY—
8Dbs. above 1 microwatt per bar @ 1,000 c.p.s.

PRICE **£5 . 5 . 0** *PER PAIR*

Descriptive Brochure "W.W.K." will be sent free on request.

Telephone: ACorn 5021

S.G.Brown, Ltd.

VICTORIA ROAD, NORTH ACTON, LONDON, W.3

M.R. SUPPLIES Ltd.

give immediate delivery from stock of the following high class and brand new RADIO AND ELECTRICAL MATERIAL. All prices nett.

CURRENT FED MICROPHONES, by prominent maker. Require no amplifier. Feed directly into 15-ohms speaker via associated transformer, in conjunction with 12-volt battery. Ideal for intercom., alarm and calling systems, etc. Hand type, with transformer, **£4/10/-**.

MOVING COIL MICROPHONES, special limited offer of Reslo Senior model on resilient mount, very fine response, 15-ohms coil, 5/16th inch mount, **£4/10/-** (5/16th inch to ½ inch adaptors, **1/6**).

ROTHERMEL PIEZO-CRYSTAL MICROPHONES (exclusive offer) D.104 specially housed with knuckle-joint for angle adjustment. ¾in. mt., 5ft. screened lead-attached, **75/-**. Also same make P.C. deaf-aid inserts, 1¼in., dia., **29/6**.

HIGH-FIDELITY LOUDSPEAKERS. We give immediate delivery of the fine Vitavox P.M. Speakers, K12/10 (10-watt) **£7**, K12/20 (20-watt), **£11**, despatch either 5/-. Both have 15-ohms coil and Ticonal magnet. Also in stock, the new Vitavox Bi-Tone, with 12-inch P.M. Speaker and Tweeter Unit with 6-cell Horn and Filter, now in fine walnut polished cabinet with louvred speaker grille, 15-ohms imp., handling up to 20-watts, **£31/10/-** (despatch 6/-).

VIBRATOR PACKS. Input 6 v. D.C. Fully smoothed output 200 v. 100 m.a. in steel cabinet 8½in. by 6½in. by 5in., with fuses, switch, etc., very efficient units. **£5/10/-** (despatch 2/6).

ROTHERMEL PIEZO-CRYSTAL PICKUPS. Senior ball-bearing model with streamlined arm, **56/3**. Same make replacement Crystal P/U Heads for Garrard and Collaro arms, **46/11**. Rothermel **SAPPHIRE NEEDLES**, best permanent needle, **12/6**. **STROBOSCOPES** for gramo-speed test under 50 c. lighting, 78, 79 and 80 r.p.m. (on cardboard), **1/-**. P.O. Type **RELAYS** (Brand new goods). Large selection available. Examples:—Coil 250 ohms, switching 2-pole make, **5/-**. Coil 250 ohms, 4 makes, **6/-**. Coil 2,000 ohms, 1-pole C.O. and 1 make, **6/6**.

GRAMPIAN OUTFIT TRANSFORMERS, best replacement type providing 8 ratios—all matching, **9/6**.

HEAVY DUTY OUTPUT TRANSFORMERS. Our improved "W.W." model is still supreme. Adequate supplies again in stock. Handles 25-watts, 11 ratios from 12/1 to 75/1 with C.T. for P.P. wt. 9½ lb., **59/6** (despatch 1/6).

PRECISION MEASURING INSTRUMENTS of highest spec. by B.P.L. **Panel Meters** (flush 3½in.) 0/1 m.a., **59/6**, 0/500 microamps **65/-** (Square type **67/6**). 0/100 micro amps, **75/-**. Combined Instruments, new portable model, 17 ranges. In moulded housing 5½in. by 4½in. by 3in. with range switching. D.C. volts:—0/75 mV, A.C., D.C. volts:—0/10, 50, 100, 500 and 1,000. D.C. milliamps.—0, 100, and 500. Resistance:—0/1,000 ohms and 0/100,000 ohms (0/1 megohm with ext. battery). With test prods, **£8/15/-**. **CAPACITY BRIDGES**, in lacquered steel cabinet 8½in. by 6½in. by 4½in. A.C. mains operated. Measurements:—Capacity—10 pf. to 110 mfds. Resistance—1 ohm to 11 megohms. Insulation—50,000 to 500 megohms. Power Factor—0 to 50 per cent., **£18/15/-**. **SIGNAL GENERATORS**, A.C. mains operation. A.C. Frequencies:—100/250, 250/650, 650/1,600 Kc/s. 1.5/4.5, 4.5/12, 12/30 Mc/s. Accuracy 1 per cent. 1 v. in 10 ohms. All ranges mod. to depth of 30 per cent. by internal 400 c. oscillator. 6in. illuminated scale. **£21** (despatch 2/6).

STEP-DOWN MAINS TRANSFORMERS, suiting rectifiers (below). Primaries all 200/250 v. (tapped). Sec.:—7, 11 and 15 v. 2 amps, **21/-**. Sec.:—6, 8 and 14 v. at 4 amps, **32/6**. Sec.:—5, 12 and 17 v. 6 amps, **49/6**. Sec.:—7 and 15 v. 10 amps, **75/-** (despatch 2/6).

STC METAL RECTIFIERS Selenium). 12 v. 1.5 amp. **12/6**. 12 v. 4 amps, **22/6**. 12 v. 6/8 amps, **39/6**. 12 v. 10/12 amps, **49/6**. 30 v. 8 amps, **£4 17/6**. 26 v. 5 amps, **62/6**.

Please include sufficient for packing and despatch.

M.R. SUPPLIES Ltd., 68, New Oxford Street, London, W.C.1.

Telephone: MUSeum 2958

World Radio History

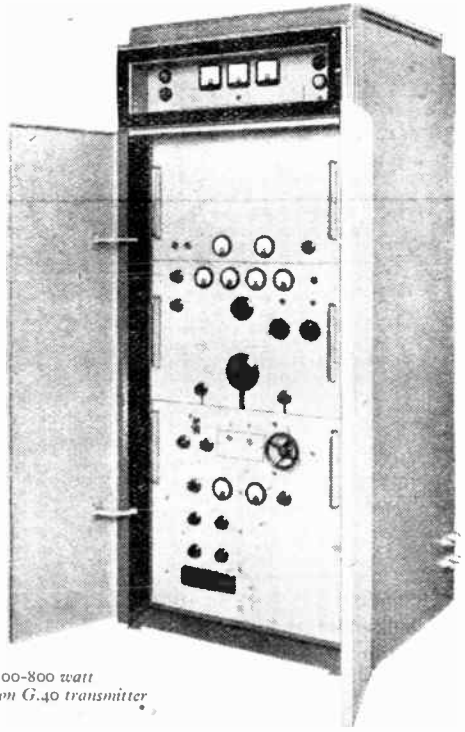

The 500-800 watt Redifon G.40 transmitter

REDIFON G.40

A new transmitter of exceptional adaptability

THE Redifon G.40 transmitter is a post-war design available with alternative R.F. and Modulator units, enabling the user to select exactly those services which fit each individual requirement. Maximum output power is over 800 watts on C.W., or 500 watts for Telephony or M.C.W.

In its simplest form, the Redifon G.40 is a C.W. transmitter for medium or shortwave communication. A frequency range of 137 Kc/s to 25 Mc/s is covered by 4 alternative R.F. units, any two of which can be fitted into one set, operating simultaneously or on instantaneous switch-over.

As a telephony station, the G.40 can be fitted with one R.F. unit and a Modulator to give 500 watts for broadcast or communication purposes.

The G.40 is ideal for medium-sized airports, where an M.F., C.W. beacon is required for navigation, and S.W. telephony for ground-to-plane communication. For this role a special model is available with a 500-watt telegraphy channel and an independent 250-watt telephony service.

For full details of the Redifon G.40 write to our Communications Sales Division.

Rediffusion Ltd.

Designers and Manufacturers of Radio Communication and Industrial Electronic Equipment

BROOMHILL ROAD, LONDON, S.W.18

DEPENDABILITY

BEHIND THE SCENES AT GARDNERS' FACTORY

... Cause and Effect

Gardners' reputation for complete dependability is no accident. It results from a combination of first-class design, highly trained operatives, and high-efficiency machines in a modern factory. Precision is the keynote in every operation.

GARDNERS

Somerford

TRANSFORMERS and CHOKES

for immediate delivery

COUPON

PLEASE SEND, WITHOUT OBLIGATION, COMPLETE LISTS OF SOMERFORD TRANSFORMERS & CHOKES.

Name .....

Address .....

.....

GARDNERS RADIO LTD., SOMERFORD, CHRISTCHURCH, HANTS.

FOR RADIO • INDUSTRY • LABORATORY

World Radio History

THE PROBLEM OF THE LABORATORY BATTERY . . . . . .

solve it simply and easily by installing a

WESTAT

FULLY AUTOMATIC RECTIFIER EQUIPMENT

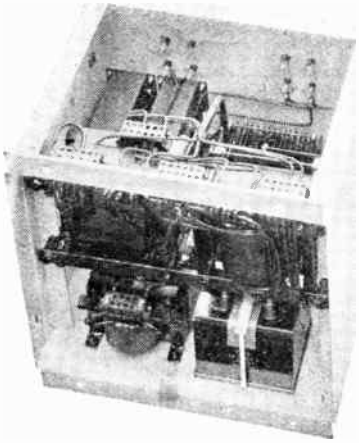

250-watt* equipment with cover removed to show internal construction. No gas discharge tubes, barreters, D.C. saturated chokes or relays.

- Battery automatically maintained in a charged and healthy condition despite erratic loads.
- Battery cannot be overcharged even if left unattended for very long periods. Maximum cell voltage is accurately controlled.
- Battery cannot gas and, therefore, will not give off corrosive spray. "Topping-up" is seldom required.
- Battery cannot be overdischarged — the "Westat" automatically provides a heavy charge when battery voltage is low.
- Battery life prolonged without any added attention.
- Fully compensated for mains voltage variation.

* Made in a range of sizes with outputs from 40 to 1800 watts

Write for descriptive pamphlet No 11L to Dept. W.W.

WESTINGHOUSE BRAKE & SIGNAL CO. LTD.
82, YORK WAY, KING'S CROSS, LONDON, N.1

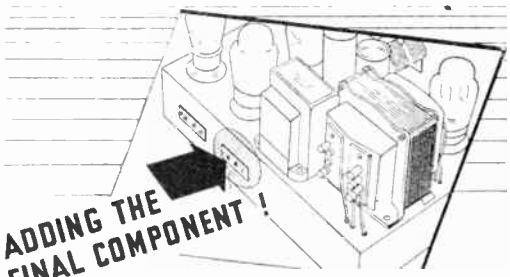

Whether the building of your receiver is a hobby or to provide entertainment in the home, selection of the final component demands the same attention as other details of the circuits. Stentorian Speakers are designed to match any desired impedance. They give such a faithful reproduction that you will at once appreciate the difference.

PERMANENT MAGNET MOVING COIL SPEAKERS

Stentorian

PRICES

Minor Type MX (for Low Impedance Extension) 39/6.
Minor Type MC (with Universal Transformer) 45/6.
Baby Type BX (for Low Impedance Extension) 53/6.
Baby Type BC (with Universal Transformer) 59/6.

WHITELEY ELECTRICAL RADIO CO. LTD., Mansfield, Notts.

AMBASSADOR

RADIO

AMBASSADOR are one of a select few Manufacturers chosen for the quality of their Radio to exhibit at the BRITAIN CAN MAKE IT EXHIBITION. It is not surprising AMBASSADOR RADIOS sell as fast as they can be made. Write for Brochure to :

AMBASSADOR RADIO WORKS
HUTCHINSON LANE,
BRIGHOUSE,
YORKS.

World Radio History

YOU WILL
BE SITTING IN
THE STALLS
IF YOU'RE
USING...

Exide

L.T. ACCUMULATORS

AND

Drydex

H.T. BATTERIES

The perfect pair for battery Radio sets

THE CHLORIDE ELECTRICAL STORAGE CO. LTD
CLIFTON JUNCTION, NR. MANCHESTER

EDX6D

PLOTTING THE COURSE

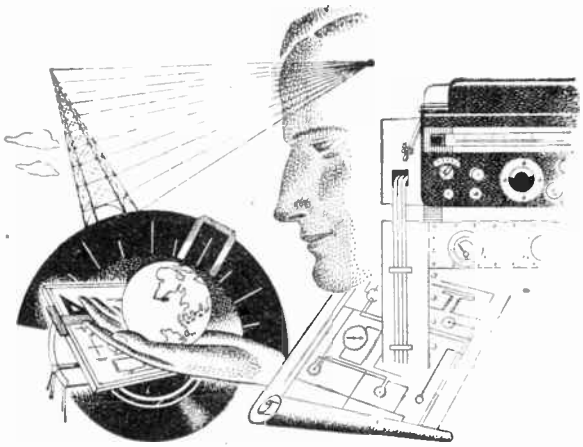

IN TOMORROW'S WORLD

In the world of to-morrow, as in the world of yesterday and to-day, Marconi's will carry forward the tradition of meticulous workmanship in communications apparatus.

New problems have been met as they have arisen by a team of experts with all the experience of a pioneer organisation behind them. Still newer problems are now arising in a post-war world. These too will be handled with the same resourceful skill. Whatever the demands of a new age—you know where you are with Marconi.

MARCONI

the greatest name in wireless

MARCONI'S WIRELESS TELEGRAPH COMPANY LTD
THE MARCONI INTERNATIONAL MARINE
COMMUNICATION COMPANY LTD
MARCONI HOUSE, CHELMSFORD, ESSEX

World Radio History

METALLISED CERAMICS

Two new S.P. metallised bushes—

one at either end of the range

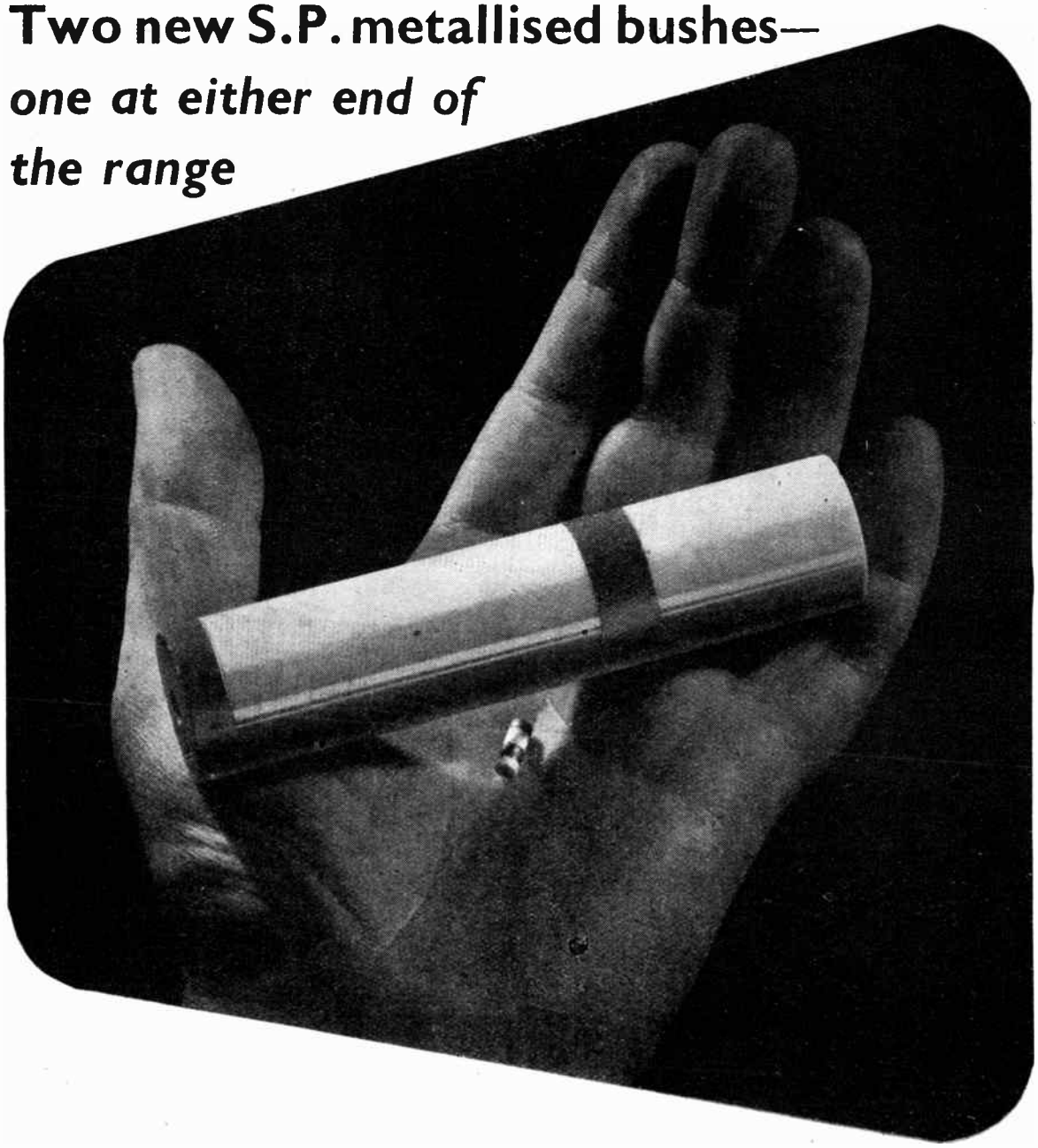

For full information and prices please write to:

STEATITE & PORCELAIN PRODUCTS LTD.

STOURPORT-ON-SEVERN, WORCS. Telephone: Stourport 111. Telegrams: Steatain, Stourport.

SP.42

World Radio History

Wireless World

Radio and Electronics

36th YEAR OF PUBLICATION

JANUARY 1947

Proprietors:
ILIFFE & SONS LTD.

Managing Editor:
HUGH S. POCOCK, M.I.E.E.

Editor:
H. F. SMITH

Editorial, Advertising and Publishing Offices:
DORSET HOUSE,
STAMFORD STREET,
LONDON, S.E.1.

Telephone:
Waterloo 3333 (50 lines).
Telegrams:
"Ethaworld, Sedist, London."

△

PUBLISHED MONTHLY

Price: 1/6

(Publication date 26th of preceding month)

Subscription Rate: Home and Abroad 20/- per annum.

MONTHLY COMMENTARY 1
TELEVISION RECEIVER CONSTRUCTION—I .. 2
NAVAL RADIO EXPANSION By G. M. Bennett 6
SHORT-WAVE CONDITIONS By T. W. Bennington 8
SIMPLE VALVE VOLTMETER By H. W. Baxter 9
NOISE FACTOR—2 By L. A. Moxon 11
FIRST STEPS IN V.H.F. EXPLORATION By "Cathode Ray" 15
WORLD OF WIRELESS 18
LETTERS TO THE EDITOR 21
VACUUM CONDENSERS By H. A. H. Griffiths 23
DESIGN DATA (10): Wide-Band Amplifiers .. 2
THE RADIO INDUSTRY By D. A. Bell .. 27
"MAGIC EYE" INDICATORS By G. O. Thacker and R. Y. Walker 30
SOCIETIES AND CLUBS 32
UNBIASED By Free Grid.. 34
RANDOM RADIATIONS By "Diallist" .. 35
RECENT INVENTIONS 38

Branch Offices:

COVENTRY:
8-10, Corporation Street.
Telephone: Coventry 5210.
Telegrams:
"Autocar, Coventry."

BIRMINGHAM:
King Edward House,
New Street.
Telephone:
Midland 7191 (7 lines).
Telegrams:
"Autopress, Birmingham."

MANCHESTER:
260, Deansgate, 3.
Telephone:
Blackfriars 4412 (4 lines).
Telegrams:
"Iliffe, Manchester."

GLASGOW:
26B, Renfield Street, C.2.
Telephone: Central 4857.
Telegrams: "Iliffe, Glasgow."

△

As many of the circuits and apparatus described in these pages are covered by patents, readers are advised, before making use of them, to satisfy themselves that they would not be infringing patents.

A NEW ADVENTURE FOR *Hams*

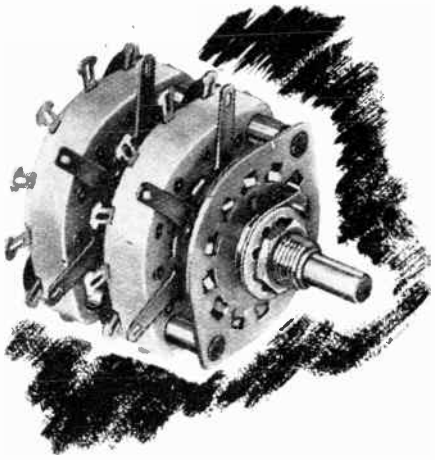

YOU CAN NOW GET CERAMIC SWITCHES IN A NUMBER OF USEFUL COMBINATIONS FROM YOUR DEALER

Wearite Ceramic Switches, hitherto restricted to Government and other priority uses, are now released. See your dealer and have your Ceramic Switches built to your specification from his kit of Wearite Switch Components. The finished job will be robust, trouble-free, and backed by the famous Wright & Weaire reputation. If any difficulty is encountered, please contact us.

WEARITE

NOW AVAILABLE FROM

Premier Radio	LONDON
Webb's Radio	LONDON
Brighton Trades Services	BRIGHTON
Amateur Radio	BURNLEY
Clydesdale Supply Company	GLASGOW
F. J. Ansell	IPSWICH
Jack Bryant	NORFOLK
Southern Radio	SALISBURY

CERAMIC SWITCHES

See your dealer today

WRIGHT & WEAIRE Ltd., High Road, Tottenham, London, N.17. Tel.: Tottenham 3847/9, and Simonside Works, South Shields, Co. Durham

World Radio History

VALVES AND THEIR APPLICATIONS

By M. G. SCROGGIE, B.Sc., A.M.I.E.E.

No. 1: Mullard 25 WATT PENTODE EL37.

THE Mullard EL37, even more than most valves, resembles a human employee in that the output obtainable from it depends very much on the care one is prepared to take to see that its working conditions are right. If one is content with, say, 10 watts, a good deal of latitude is allowable. A single valve will do, and there is not much point in exceeding 250 volts on anode and screen. Self-bias and a touch of negative feedback help to compensate for any variations in load, power supply and so forth.

In this role, however, the EL37 is under-employed. A pair of them in a Class AB1 circuit is capable ideally of delivering as much as 70 watts audio with less than 3% total harmonic distortion, the anode *plus screen* efficiency being 50%. This, it should be noted, is without running into grid current; so the driver stage is straightforward. But special care should be taken over these points:

1. The grid bias (nominally — 35V) must be constant, and preferably separately adjustable for the two valves.
2. Anode and screen supplies must be practically constant at 400V over a range of 100-276mA and 12-73mA respectively.
3. Load matching must be good. The optimum is 3250 ohms anode-to-anode; and power-handling capacity falls off rapidly outside the limits 2400-5000 ohms.
4. The output transformer must be well designed. Low efficiency runs away with many of the watts; and excessive leakage inductance accentuates variations in load impedance.
5. If negative feedback is used, 7% is sufficient to give a 1 : 1 speaker-to-valve impedance ratio, and raises the drive required from 34 + 34 to about 60 + 60 V Peak. To avoid magnifying hum, feedback is best taken from the transformer *secondary*.
6. Anti-parasitic stoppers should be used (33Ω for anodes and screens; 1000Ω for control grids).
7. The pair of valves should not be driven so that the *mean* power per anode exceeds 25 watts for many seconds at a time. In other words, it is all right on speech or music, but the screens would object to maximum watts of continuous tone.
8. Even with all due care, it is too much to expect *perfect* supply stabilization valve matching, load matching and output transformer; so 50-60 watts would be a wiser maximum power rating.

If you want a substantial output, but are worried about meeting the above conditions, there is a compromise that yields 35 watts and is practically overload-proof. Thanks to self-bias, it demands much less of the supply voltage regulation. These are the working conditions for a pair of valves:

V_a	400 V	I_a	No signal	125 mA
V_{g2}	225 V		Max. signal	140 mA
R_k	110Ω	I_{g2}	No signal	13 mA
R_{a-a}	7000Ω		Max. signal	25 mA

Grid drive at 35 W output: 18 + 18 peak

Total harmonic distortion at 35 W output: < 2.5%.

This is the first of a series written for us by M. G. Scroggie, B.Sc., A.M.I.E.E., the well-known Consulting Radio Engineer. Reprints for schools and technical colleges may be obtained free of charge from:

THE MULLARD WIRELESS SERVICE CO., LTD., TECHNICAL PUBLICATIONS DEPARTMENT, CENTURY HOUSE, SHAFTESBURY AVE., W.C.2

World Radio History

Wireless World

Radio and Electronics

Vol. LIII. No. 1 JANUARY, 1947 Price 1s. 6d.

Monthly Commentary

B.B.C.: 1947-1952

WHEN the White Paper on Broadcasting Policy was issued a few months ago we criticized it on the grounds that it showed too much timidity. Naturally enough, the new B.B.C. Charter, of which the general terms were foreshadowed in the White Paper, contains equally little of the spirit of adventure. Changes introduced are trivial; indeed, some of them seem to us so trivial that they might well have been omitted altogether. Although we have never pressed for any sweeping changes in the constitution of British broadcasting we regret that an opportunity has been missed for giving a trial to some of the measures that have been put forward for curing the admitted weaknesses of the present service.

Barring any major upheaval, we are thus committed to the *status quo* for a further period of five years. In that fact *Wireless World*, though admitting to some regrets, sees no cause for despondency. The existing system though often criticized, suits the British temperament, and has great achievements to its credit. Proposals for changes in the basic concept of our system have seldom been backed by plausible arguments, and have generally failed to secure any widespread support. But some of the major reforms that seem worthy of trial, though not running contrary to the real basis of the system, could hardly be given effect inside the framework of the Charter, and so must be postponed for five years. However, lesser changes could certainly be introduced without new legislation, and there is no reason why the B.B.C. should rest on its oars for five years.

Broadcast Licence Changes

WE were recently impelled to criticize the terms of the broadcast receiving licence as unnecessarily restrictive. Our main complaints were that provision was not made for the reception of telegraphic messages addressed to all stations and that the restriction of broadcast telephony listening to "authorized" stations gave an impression that the Postmaster General was assuming the rights of censorship; grounds for suspecting that this was so were given by a gratuitous statement by a Post Office spokesman that listening to the "Voice of Israel" station was not covered by the licence. *Wireless World* ascribed the P.O. attitude in these matters to over-cautiousness and excess of zeal in guarding its monopoly, rather than to "totalitarian" tendencies, as has been suggested in the lay Press.

Our first protest elicited the information that a form of licence permitting the reception of both telegraphic and telephonic broadcast and multi-destination wireless press messages was being prepared. This new licence, for which the royalty fee is £20, is now ready for issue. We are now informed that the ordinary broadcast receiving licence is being re-worded to allow the reception of both telegraphy and telephony from amateur stations. It is all to the good that the reception of telegraphy has thus to some extent been regularized.

We have been asked by the Post Office to correct a possible misconception of the term "authorized broadcasting stations," which appears on the licence. This should be defined as "all broadcasting stations in any part of the world which are operated under the authority of an Administration in accordance with the International Radio-Communication regulations." We gladly give this explanation, though probably few of our readers are under the false impression that "authorized" means "authorized by the G.P.O." We sympathize with the Post Office's efforts to discourage lawlessness in the ether, but this insistence on "authorized" seems to be unfortunate; the restriction is bad because it cannot be enforced, it creates the impression—fostered elsewhere in the licence—of autocratic control and might also involve the need for some very awkward rulings.

World Radio History

TELEVISION RECEIVER CONSTRUCTION

1.—Deflector Coils: General Principles

As announced in the November issue of "Wireless World" constructional details of a television receiver, and of special components for it, are to be published. No previous practical experience of television should be needed for its construction, but it is assumed that the builder has good practical experience of ordinary sound-set construction and a knowledge of television circuit principles. Theoretical articles have appeared during the last year, and will be continued concurrently with the constructional ones.

IN a television receiver in which the electron beam of the cathode-ray tube is deflected electromagnetically the rectilinearity of the picture, and the attainment of a good and even focus over its surface, depend very largely upon the deflector coils. Their design and construction are thus matters of the first importance, and it is unfortunate that hitherto very little useful information about them has been published.

This is undoubtedly because of the extreme difficulty of any quantitative analysis, for in such an analysis it is necessary to calculate the three-dimensional magnetic field produced by the passage of a current through coils of known physical shape. Such a calculation can only be readily performed when the coils have certain very simple geometrical shapes and it is found experimentally that such simple shapes do not give a performance which is adequate for television.

In general, therefore, design is carried out on an experimental basis, bearing in mind the general theoretical principles involved. The form of coil adopted must not only conform to these principles,

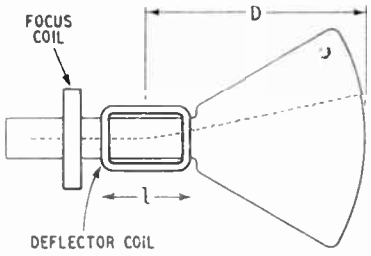

Fig. 1. The deflection sensitivity is proportional to the length *l* of the deflector-coils and to the distance D between their centre and the screen.

but it must also be such that it is possible to construct it without undue labour and without elaborate tools. Because of this definite limitation it is very desirable to consider principles and construction together.

In view of the lack of published information and the fact that possible forms of coil are limited by mechanical feasibility, this article on the construction of scanning coils necessarily opens with a discussion of the principles. This is desirable in order that the reasons for the form of construction finally adopted, and described later in the article, may be fully understood.

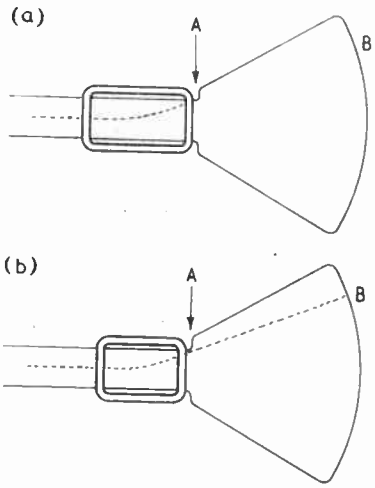

Fig. 2. When the deflector coils are too long (a) the beam strikes the tube shoulder at A and is cut off, but with the correct length (b) it just misses the shoulder.

The first step is to consider the general deflection problem. The basic arrangement of cathode-ray tube, focus coil, and deflector coil is sketched in Fig. 1 with the path of the electron beam shown dotted. The deflection sensitivity, ignoring second-order effects, is directly proportional to the distance D between the screen and the centre of the deflection system and to the length *l* of the deflection system itself. It is always desirable to keep the sensitivity as high as possible to economize in scanning power.

With a given tube the distance from the screen to the front ends of the deflector coils is fixed, for the coils cannot normally come further forward than the start of the tube flare. This is the distance $D - l/2$.

The first factor limiting the length of the deflection system is the need for avoiding beam cut-off on the tube shoulder. This can be seen in Fig. 2(a), which shows the path of a beam through a long deflector having a current such that, in the absence of the shoulder A, the beam would strike the screen towards its edge at B. It is, however, intercepted by the shoulder at A.

With a given tube this can be avoided by reducing the length of the deflector coils and increasing the current to produce a stronger field and bend the beam more sharply, as shown in Fig. 2(b). It can be seen that with the shorter deflector the beam at maximum deflection just clears the shoulder at A.

The second factor affecting the length is the necessity for providing a focus coil between the back of the deflector coil and the electron gun. In general, a smaller

World Radio History

spot size can be obtained when the focus coil is moved towards the screen but the focusing current increases and there is more danger of deflection defocusing through overlapping of the focusing and deflection fields. A compromise is often necessary and in general with modern "short" tubes the length of the deflection system is more often limited by the requirements of focusing than by beam cut-off.

The deflection of an electron beam through a magnetic field is proportional to the strength of the field and in a direction at right angles to the field. A vertical field is thus needed for horizontal deflection and a horizontal field for vertical deflection. For a uniform scan, the field must clearly be of constant strength and direction across the area through which the beam passes.

If two large diameter coils are mounted horizontally in parallel planes, as shown in Fig. 3(*a*) and connected in series-aiding, the field between them depends on their separation, *d*. With circular coils, it is shown in elementary text-books of electricity and magnetism that the field in the centre becomes most uniform when the spacing of the coils is equal to their radii.

When the coils are too widely spaced the field tends to bow outwards at the sides as at (*b*) and when they are too close it tends to bow inwards (*c*). When they are correctly spaced the field is substantially uniform (*d*), over a large area.

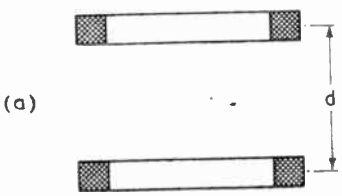

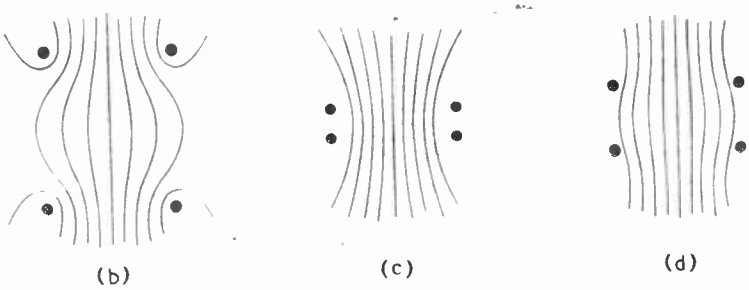

Fig. 3. The field between two parallel coils (a) depends on their separation *d*. The dots in (*b*, *c* and *d*) indicate the cross-sections of the windings and the general shapes of the fields are shown when the separation is too great (*b*), too small (*c*) and optimum (*d*).

In order to obtain a uniform field the two coils must be correctly spaced and the coils must be as large as possible. The size is usually limited by the need for interlacing two pairs of coils for the two deflections and also by considerations of deflection sensitivity, since if the coils are large the uniform field in the centre is weaker because it is further from the coils.

Flat circular coils cannot be placed closely enough for a uniform field unless they are of prohibitively large diameter, because they must be separated by at least the diameter of the tube neck. It is usual, therefore, to adopt rectangular coils with the "sides" lying parallel to the tube neck and the "ends" bent around it. The shape of the coil then has the basic form sketched in Fig. 4(*a*).

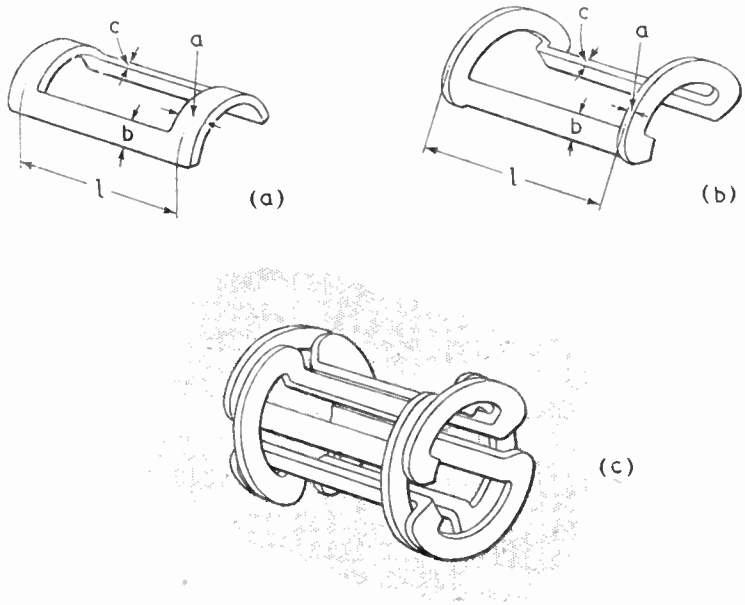

Fig. 4. A thin slab coil bent to lie around the neck of the tube is shown at (*a*) and a similar coil with the ends bent up at (*b*). A greater effective length is secured with the latter. The way in which two pairs of such coils are interleaved for the two deflections is shown at (*c*).

The shape of the field can then be controlled not only by the spacing of the two coils, but by the cross-sectional shape of the winding, which can be circular, square or rectangular.

The required deflection field is produced chiefly by the straight sides of the coil lying parallel to the neck of the tube, and it is this part which must be as long as possible. The simplest method of construction is to wind a rectangular slab coil, in a suitable former, tie it up, remove it from the former and bend it around a cylinder of the same diameter as the tube neck to form a coil of the shape sketched in Fig. 4(*a*). Al-

World Radio History

Television Receiver Construction— though it is simple to make, such a coil does not give the maximum useful field, for the effective length of a side is the distance l between the centres of the end parts.

If the coil is of square section, so that $a = b = c$, the loss of length is small, but if a is greater than c, it can be appreciable and a greater effective length can be secured by so winding the coil that the dimension a is about the same as c. When the overall length is $2\frac{1}{4}$in, the section of the side limbs might well be $\frac{3}{8}$in for b and $\frac{1}{8}$in for c. With a coil like Fig. 4(a), the effective length l would be $2\frac{1}{4} - \frac{3}{8} = 1\frac{7}{8}$in when a is also $\frac{3}{8}$in. By making the coil in the form of Fig. 4(b), the effective length can be increased to $2\frac{1}{4} - \frac{1}{8} = 2\frac{1}{8}$in, for the part a becomes $\frac{1}{8}$in only. This represents an increase of 13 per cent in the sensitivity.

As line deflection is usually considered more difficult than frame and as the deflection amplitude is greater it is usual to make the line coils of the full available length and with a shape like that shown in Fig. 4(b). The second pair of coils for the frame deflection is frequently made of the same shape, but with the dimension l shorter so that they will just fit inside the line coils as shown in Fig. 4(c).

This is a very satisfactory deflection system. It is usually provided with an iron "core," which is better termed a ring, since it lies outside the coils. Sometimes it consists of a stack of circular-shaped laminations around the coils, but in the writer's experience this is unnecessarily elaborate. He has found that it is sufficient to bend a few strips of silicon-steel around the coils. The purpose of the iron ring is to reduce the reluctance of the magnetic path external to the coils and by so doing to increase the useful field inside.

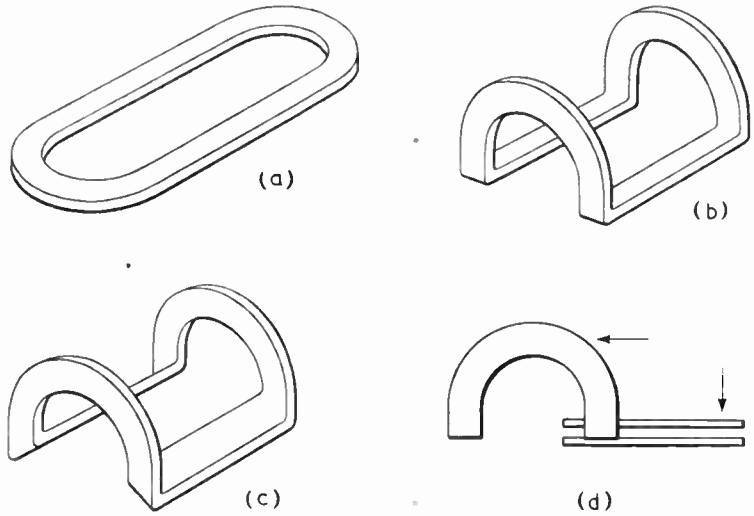

Fig. 5. One way of making coils similar to Fig. 4 (b) is shown here. A flat slab coil with rounded ends (a) is wound, and the ends are bent up (b) and the sides are twisted (c). The twisting is done by holding a side between two strips of wood and applying pressure in the direction of the arrows (d), so that the sides are twisted as in (c), which is more clearly shown in the end view (e).

As the complete magnetic circuit necessarily contains as an air gap the whole distance across the neck of the tube, the reluctance of the total magnetic circuit is controlled largely by this air gap. As a result variations in the shape, quantity and kind of iron used for the external ring have a very small effect on the performance. Practically speaking it is sufficient if there is some external iron.

It was said earlier that the required field is produced chiefly by the straight sides of the coils. However, the ends must necessarily produce fields as well and it is through these that most of the troubles of magnetic deflection arise. If the coils were of flat rectangular shape the effects of the ends would not be serious. The fields produced by the ends would be substantially uniform and that produced outside the coil would tend to cancel that produced inside. The cancellation would not be complete for the fields produced by the ends would lie at different distances along the tube and so exercise different "leverages" on the electron beam.

However, in practice, the coils are not flat but bent, and in the simplest form are like Fig 4(a). The end fields then have a large radial component and are equivalent to very non-uniform fields, one acting across the tube parallel to the field produced by the side limbs and the other acting across the tube at right angles to this.

This seriously affects the rectilinearity of the picture. This could be corrected by adjusting the separation of the side limbs, but in addition there are components of the field which act lengthwise along the tube and which thus have a focusing rather than a deflection action. Such fields are always present in some degree and their importance depends on their magnitude, their position and the deflection angle of the beam.

It can be said at once that the simple bent coils like Fig. 4(a) are satisfactory only for small angles of deflection. If the coils fit closely around the tube neck, as they must for efficiency, very serious defocusing and picture distortion occurs with the large deflection angles of modern "short" tubes.

This trouble is avoided by using the form of construction shown in Fig. 4(b); for by bending up the ends in the manner shown the field produced by the ends is moved further from the electron beam and so weakened over the volume where it is harmful. There is also a further point, without bent-up ends, the outer iron ring increases the "end" field nearly

World Radio History

as much as the wanted "side" field, but with bent-up ends it has relatively little effect on the "end" field. This is because the ring then lies closer to the tube than the ends of the coil.

For good deflection the use of bent-up end coils is a necessity and the fact that they also tend to be rather longer, and so give greater efficiency, is really a minor point. Even if they were less efficient they would have to be used.

It is now necessary to consider how coils of this bent-up end type can be constructed. There are two methods—winding directly to shape or bending a flat-wound coil to shape.

Coils of the shape of Fig. 4(*b*) can be wound directly to the required final shape on a special former. The wire needs manipulation around four separate corners in each turn, however, so that the method is too laborious for anything but low-inductance coils. Practically speaking, it is limited to coils of less than about 200 turns apiece. For such coils, however, it is a very satisfactory method of construction.

Coil Bending

An approach to this shape can be obtained by a bending process illustrated in Fig. 5. For a start, a slab coil with rounded ends (*a*) is wound on a former comprising a core piece and side cheeks. The cheeks are slotted at intervals, so that after winding the coil can be tied up before removing it from the former.

It is taken off the former and the ends bent up as in Fig. 5(*b*) and the sides are then twisted (*c*) to bring the coil to the shape (*e*). The twisting is done by gripping a side between two strips of wood and applying pressure in the directions shown by the arrows in (*d*).

The merits of this scheme are that there is no limit to the number of turns that can be used and the winding itself is easy. Its great drawback is that quite a little skill is needed to carry out the bending and twisting process without ruining the coil. It can be done and, in fact, it is not nearly as difficult as it seems. However, the final shape is not quite what is wanted, for the ends do not start off away from the tube along a diameter. It is a usable compromise, however.

The main difficulties of bending are brought about by the fact that the lengths of wire needed on the inside and outside of the bends are different. If the wire were rigidly held on both sides of a bend, the outside turns would necessarily be stretched; with fine gauge wires there would inevitably be breakages. However, if the wire is held rigidly on one side of the bend only, the necessary adjustment is obtained by the displacement of the turns in the unclamped part of the coil.

Now with bent-up ends, the whole purpose of the bend-up is to remove the end from the tube so that its field is of neglible importance. Therefore, the uniformity of winding over the ends is itself of no importance. We thus conclude that during the bending process it is necessary to clamp rigidly those parts of the coil which will form the side limbs, but not the rest of the coil.

When bending, the wire sprays out horribly over the unclamped part, but can afterwards be bunched neatly together. The result is a neat coil which is by no means difficult to make. For success in bending the coils it is essential to make a simple jig for holding the different parts.

There are thus two ways of making coils. Winding to shape is practicable only for low-inductance types, but bending can be used for either. However, bending is actually slightly more suited to the many turns of fine wire of high-inductance coils than to the few turns of thick wire of low-inductance types, because the fine wire is rather more tractable.

Low-inductance coils must be fed from a transformer but high-inductance can be resistance-capacitance fed. In the case of the line deflection low-inductance coils are a necessity because it is not practicable to make the coils with insulation adequate to withstand the several thousand volts which would be developed across high-inductance coils on the line fly-back.

For the line scan, therefore, a pair of coils of about 150 turns apiece and former wound to the shape of Fig. 4(*b*) is practicable and efficient, and the labour of construction is not excessive.

For the frame scan, high-inductance coils are electrically satisfactory and the transformer needed for low-inductance coils is, because of the low frequency, rather a difficult component. It must have a high primary inductance and it demands a large iron core and a considerable quantity of fine gauge wire. The primary turns needed are at least 20,000. Because of the labour of winding if no machine is available and because both wire and laminations are not too readily available now, it is well to avoid the use of a transformer if possible.

It is thus desirable to use high-inductance coils for the frame scan and this means some 1,500-2,500 turns per coil. Coils having the shape of Fig. 4(*b*) are a necessity, however, and there is consequently no alternative to the bending process.

Taking into account the electrical requirements of efficiency and performance, together with the need for economy of labour and materials, we conclude that for the line scan a pair of low-inductance coils is needed and that they are most readily constructed by winding directly to the required shape. On the other hand, for the frame scan high-inductance coils are more suitable and are most easily made by bending flat-wound coils to shape.

In a further article full constructional details will be given.

OUR COVER

A FEEDER selector switch in the aerial switching tower at the B.B.C.'s high-power short-wave station at Skelton, near Carlisle, is illustrated on our front cover.

Six of these switches, which are electrically rotated from the transmitter building, permits the output from each of the six transmitters to be connected to any one of six aerial arrays.

World Radio History

NAVAL RADIO EXPANSION

Formation of Navy's New Electrical Branch

By G. M. BENNETT

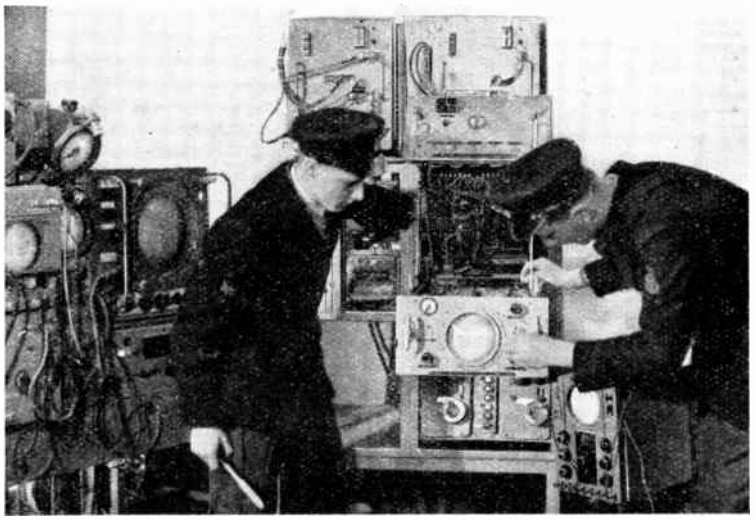

Petty Officer Radio Mechanics working on the display panel of a naval radar set

PRIOR to the recent war wireless equipment in the Navy was limited to installations used for communication between ships, and between ships and the shore, plus ancillary equipment such as direction finders. The technical maintenance of this radio equipment, which was relatively simple compared with present-day gear, was in the hands of the Signal Branch. Naval executive officers who specialized in signals, commissioned and warrant telegraphists and telegraphist ratings —from Chief Petty Officer down to Boy Telegraphist—were responsible both for the maintenance of wireless equipment and for its use.

Around 1935 it began to become apparent that the ever increasing technical complication of wireless equipment was making it difficult to train a single type of rating both to operate it efficiently and to maintain it adequately. The suggestion that a separate type of rating was necessary for technical maintenance duties, leaving telegraphists free to carry out their operating duties, was put forward. No great change had, however, been made when war broke out in 1939.

Then two new factors necessitated action. First, a vast expansion in the number of telegraphist ratings necessitated shortening training courses. This made it impracticable to turn the vast number of "hostilities only" telegraphist ratings into technicians as well as operators. Secondly, radar was born. From its very inception into the Navy it was decided that it was out of the question, in view of its complications, to train the same men both to operate and maintain radar gear. As a result the new rating of Radio Mechanic was introduced in 1940.

The necessary numbers could not be recruited and trained except over a period of years. The war was nearly over by the time responsibility for the maintenance of *wireless* equipment had been transferred to these new ratings, although they undertook radar maintenance from their inception.

Radio Mechanics

Space will not allow me to trace the vicissitudes through which the Radio Mechanic Branch has passed during the last six years. In view of the difficult circumstances in which this important new branch was started, it is to the Navy's credit that they were successfully overcome. To cite but one example: Because training courses had to be limited in length specialization had to be accepted. Thus there were Radio Mechanics (R) who dealt with radar, (W/T) who dealt with wireless, and (WR) who dealt with the limited range of both wireless and radar in small ships.

In the beginning a certain number of radio mechanics were entered direct from civil life with experience gained, for example, in the radio industry, whilst a further number were transferred from other branches of the Service. But the large majority were entered direct from every walk of life and trained from scratch by the Navy. They were first given a six months' course in basic radio theory and elementary workshop practice at a technical school. They then passed either to the Navy's Radar Technical School, H.M.S. *Collingwood*, at Fareham, or the Navy's Signal School, H.M.S. *Mercury*, near Petersfield, for their actual technical training on Naval radar or wireless equipment. After some six months at one of these schools they went to sea, or to a shore radio station, as Leading Radio Mechanics. Subject to satisfactory service and recommendation they were rated Petty Officer Radio Mechanics after one year at sea, and Chief Petty Officer Radio Mechanic after a further three years.

So far as officers are concerned, Warrant and Commissioned Telegraphists and Signal Officers remained responsible for the technical maintenance of wireless equipment, though the enormous technical developments made in radio during the war indicated the desirability of relieving these officers of their technical responsibilities in order that they could devote their time to their execu-

World Radio History

tive "user" duties. With radar it was decided to recruit special technical officers as early as 1940. These were R.N.V.R. officers whose ranks ranged from Midshipman to Commander, the majority belonging to the Special Branch. They wore the distinguishing mark of light green cloth between their stripes. Some entered direct from civil life, others were promoted from radio mechanic, but the majority were young men entered from the Universities under the Hankey scheme. Some of the Dominions, notably Canada, provided a considerable quota. The actual length of training given to these officers in H.M.S. *Collingwood* varied. It started as a course of some two months and ended with one as long as a year.

In 1945, as a first step towards relieving Signal Officers and Warrant and Commissioned Telegraphists of their technical duties with respect to wireless equipment, W/T Officers were introduced. They were in all respects comparable with the aforementioned radar officers except that their training consisted of six months at the Signal School, H.M.S. *Mercury*.

It is of interest to record that on V.E.-day the following numbers of officers and ratings entered purely for radio maintenance duties, were serving in the Navy:—

Radar and W/T Officers (including some W.R.N.S. Officers) ..	800
Radio Mechanics	5,000
W.R.N.S. Radio Mechanics	650

It should, perhaps, be added at this point that none of the above was concerned with radio equipment fitted in aircraft of the Royal Navy. For its maintenance 330 Air Radio Officers, comparable to the Radar and W/T Officers already mentioned, and some 4,700 Radio Mechanics and 700 W.R.N.S. Radio Mechanics specialized to deal with airborne radio equipment were introduced. Thus on V.E.-day the Navy was using something over 1,100 officers and 11,000 ratings for the maintenance of the radio equipment fitted in its ships, aircraft and shore stations in addition to those officers and ratings of the long-established Signal Branch who were partially employed on such work.

By the time V.E.-day came the Navy was actively considering the future of radio maintenance in the Navy under peacetime conditions when, among other things, economy is essential. It was decided to combine radar and W/T officers into a single category to be called Radio Officers. The entry and training of radio mechanics continued at a reduced rate. Applications were accepted from R.N.V.R. Radio, Radar and W/T Officers and from radio mechanics, practically all of whom were "hostilities only" ratings, to transfer to the R.N. on regular service engagements.

Formation of Electrical Branch

But parallel with all these changes the Navy had been giving a great deal of thought to the question of maintaining not only its radio but all its electrical equipment. Technical responsibility for non-radio electrical equipment rested with the Torpedo Branch. But, as in the case of the Signal Branch, it had become apparent that Torpedo Branch officers and men could not be adequate technicians and sea men at the same time.

This resulted in a decision to create a new branch to be called the Electrical Branch. Its formation has just been announced. It will be several years before it is in a position to take over its full responsibilities from all the existing branches now concerned, for these extend to the technical aspects of all types of electrical and electronic equipment in use ashore and afloat. Its officers will be Midshipman (L), up to Captain (L). To start the Branch off considerable numbers of R.N.V.R. (Special Branch) Radio, Radar and W/T Officers, as well as officers from non-radio branches, have, and are being, transferred with appropriate rank and seniority. In future the large majority of officers will be obtained by the established Special Entry Scheme already in force for other branches of the Navy and by promotion from the Lower Deck. Their training, lasting some six years, will include a year at sea in a training cruiser, three years at Cambridge University and two years in workshops and at H.M.S. *Collingwood*, now the Navy's principal Electrical School. Whilst all will receive a common training in all electrical equipment, a number will specialize in radio.

As regards ratings electrical

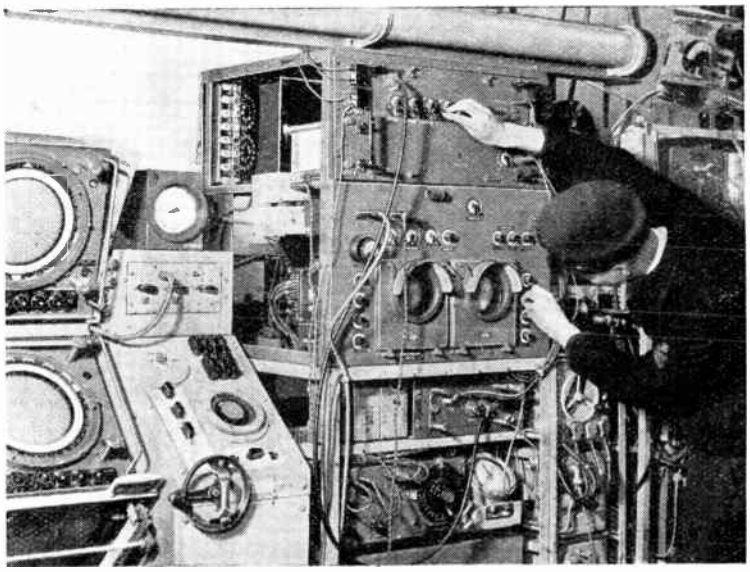

Receiving portion of a naval long-range aircraft warning radar set being adjusted by a Petty Officer Radio Mechanic

World Radio History

Naval Radio Expansion—
artificers, electrical mechanics and radio mechanics already serving, or who volunteer to serve for, regular engagements are being transferred to the new Branch. In addition many seaman ratings who now hold non-substantive ratings in the Torpedo Branch and are consequently qualified to deal with electrical maintenance, will likewise be transferred together with a number of telegraphist ratings who have acquired a sufficient technical knowledge. They will be graded as Electrical Artificers who will specialize in either radio or general electrical equipment, and as Electricians or Radio Electricians. For each type there will be the usual naval substantive rates up to Chief Petty Officer. Promotion both to Commissioned and to Warrant rank will be open to selected ratings as in other branches of the Service.

There can be no doubt that the introduction of this new electrical branch is an important development in the history of the Navy and an important step towards ensuring that its vast amount of electrical and radio equipment is always maintained in the highest state of efficiency. There can also be no doubt that it will offer an electrical and radio career second to none in the country.

Readers of this journal whose inclinations lean towards a life which, whilst taking them to sea and all over the world, enables them to exercise their bent towards radio, will be interested to note that the Admiralty is already calling for volunteers to be trained as both Officers and ratings for this new branch of the Navy.

SHORT-WAVE CONDITIONS

Expectations for January

By T. W. BENNINGTON

(Engineering Division, B.B.C.

DURING November maximum usable frequencies for this latitude continued to increase during the daytime and to decrease during the night, in accordance with the normal seasonal trend in the atmospheric ionization. There was not a great deal of ionosphere storminess, and exceptionally high frequencies were often usable over daylight routes. In order to give an idea of the very high frequencies which were *occasionally* propagated by the normal ionosphere layers it may be mentioned that reception from this country on frequencies above 40 Mc/s was several times reported from the West Indies and South Africa, while on one occasion an amateur U.S.A. transmitter in the 56-Mc/s band was heard in this country. Long-distance propagation on such a very high frequency should not, however, be expected to become a frequent occurrence in these latitudes, unless indeed future sunspot activity far exceeds that of the last sunspot maximum. It should therefore be regarded as something in the nature of a "freak" effect, and only to be expected on days of abnormally high ionization. As to *normal* reception on high frequencies during November, the B.B.C.'s 26-Mc/s transmission was regularly well received in many parts of the world, including New Zealand.

Though no very severe ionosphere storms occurred during November, there were several of moderate or slight intensity. These took place during the periods 1st-2nd, 10th-11th, 16th, 19th-22nd and 24th-26th.

Forecast.—There should be very little change in either daytime or night-time M.U.F.s as between December and January: if anything, both will tend to become a little higher. In January, therefore, communication on the higher frequencies should be good for considerable periods, though the duration of such periods will be smaller than during later months of the year. Night-time M.U.F.s will be relatively low, and will remain operative for relatively long periods. At this stage of the sunspot cycle, however, it is not expected that frequencies lower than about 7 Mc/s will be necessary for night-time use over most circuits.

Below are given, in terms of the broadcast bands, the working frequencies which should be regularly usable during January for four long-distance circuits running in different directions from this country. In addition, a figure in brackets is given, which indicates the highest frequency likely to be usable for about 25 per cent of the time during the month for communication by way of the regular layers:—

Montreal:	0000	9 Mc/s		(13 Mc/s)
	0100	7 ,,		(11 ,,)
	1100	11 ,,		(15 ,,)
	1200	17 ,,	or 21 Mc/s	(28 ,,)
	1400	26 ,,		(35 ,,)
	1700	21 ,,		(29 ,,)
	1900	17 ,,	or 15 Mc/s	(21 ,,)
	2100	11 ,,		(19 ,,)
	2200	9 ,,		(14 ,,)
Buenos Aires:	0000	9 ,,		(14 ,,)
	0400	7 ,,		(12 ,,)
	0800	11 ,,		(16 ,,)
	0900	17 ,,	or 21 Mc/s	(28 ,,)
	1100	26 ,,		(34 ,,)
	1800	21 ,,	or 17 Mc/s	(28 ,,)
	2000	11 ,,		(16 ,,)
	2200	9 ,,		(15 ,,)
Cape Town:	0000	9 ,,		(14 ,,)
	0600	11 ,,		(17 ,,)
	0700	21 ,,		(30 ,,)
	0800	26 ,,		(36 ,,)
	1600	21 ,,	or 17 Mc/s	(28 ,,)
	1800	15 ,,		(18 ,,)
	1900	11 ,,		(16 ,,)
	2000	9 ,,		(15 ,,)
Chungking:	0000	7 ,,		(11 ,,)
	0400	9 ,,	or 11 Mc/s	(14 ,,)
	0600	15 ,,	or 17 Mc/s	(20 ,,)
	0800	21 ,,		(30 ,,)
	1100	17 ,,		(26 ,,)
	1200	11 ,,		(17 ,,)
	1300	9 ,,		(14 ,,)
	2000	7 ,,		(11 ,,)

January is not usually a particularly disturbed month, though such ionosphere storms as do occur are likely to be particularly troublesome at this time of year over dark transmission paths. At the time of writing it would appear that storms are more likely to occur during the periods 3rd-4th, 9th, 13th-16th, 20th-23rd and 31st than on the other days of the month.

Manufacturers' Literature

ILLUSTRATED list and technical description of electrolytic capacitors with "all aluminium" construction, from the Telegraph Condenser Co., Wales Farm Road, North Acton, London, W.3.

A direct-reading pH meter making use of an interesting constant-grid-current electrometer circuit is described in Bulletin B-569-B issued by Muirhead & Co., Elmers End, Beckenham, Kent.

Production test equipment including Limit Resistance Bridge, Type 301A, A.C./D.C.. Flash Test, Type 401A, and Turns Count and Pressure Test for Coils, Type 2502A are described in leaflets issued by Dawe Instruments, Harlequin Avenue, Great West Road, Brentford, Middlesex.

A comprehensive survey of R.F. heating technique is given in an illustrated booklet "Process Heating by High Frequency Valve Generators," issued by the General Electric Co., Magnet House, Kingsway, London, W.C.2. Representative industrial applications are described with process time curves and details are given of G.E.C. generators ranging from 100 watts to 25 kW.

World Radio History

SIMPLE VALVE VOLTMETER

Stable Calebration with Operation from Batteries

By H. W. BAXTER,
B.Sc., A.M.I.E.E.

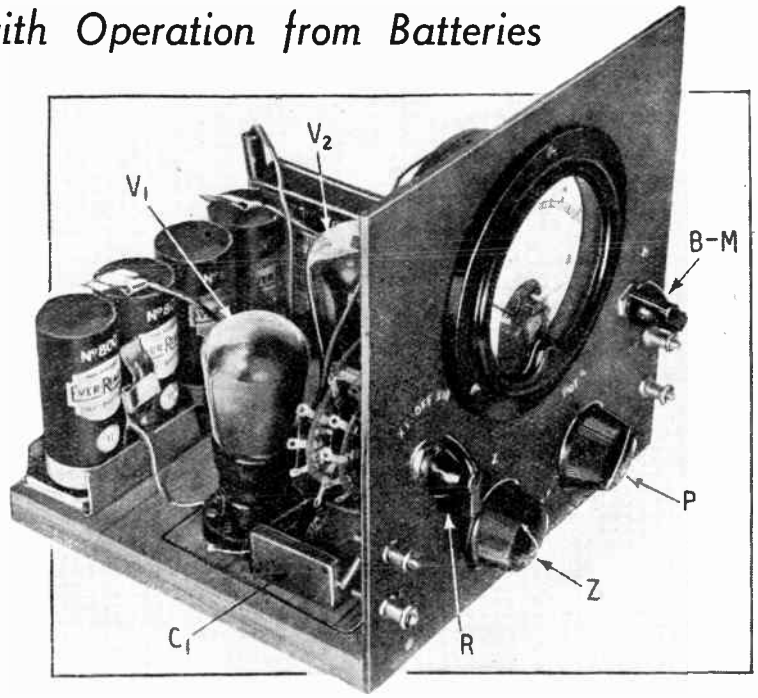

General view of battery valve voltmeter removed from its case.

ONE of the drawbacks of the direct reading valve voltmeter is the necessity of maintaining the supply voltages within fairly close limits if the accuracy of the readings is not to be impaired. It is true that there are reliable mains-operated models on the market, usually of the reflex type, but these are generally impracticable for field tests where batteries have to be used. One is therefore faced with the desirability, or even the necessity, of frequent calibration unless one uses the Moullin type of "anode bend" voltmeter where the current from an accumulator (usually of 6 volts) is adjusted to give a predetermined scale reading on the instrument. This type, however, reads up to only two or three volts and if readings up to, say, 100 volts are to be covered, and the reflex type of valve voltmeter is used, an H.T. supply of some 200 volts must be provided.

In the valve voltmeter to be described the calibration is independent of the H.T. voltage and a range of 50 volts or more can be covered with an H.T. supply of only 9 or 10 volts. Satisfactory operation is obtained over a range of frequency from 50 cycles to several megacycles per second.

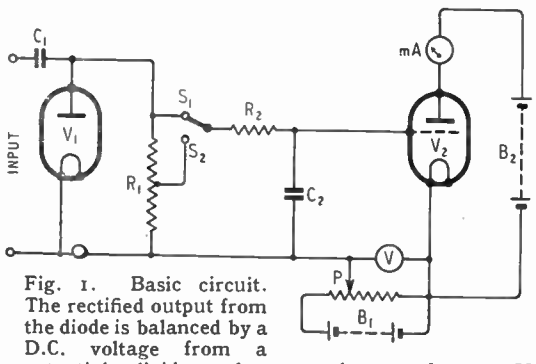

Fig. 1. Basic circuit. The rectified output from the diode is balanced by a D.C. voltage from a potential divider, the second valve acting as a balance indicator.

The principle on which the instrument operates will be understood from Fig. 1. The voltage to be measured is applied to the diode valve V_1 so that the condenser C_1 is charged to nearly the peak voltage. This voltage, which appears across the resistance R_1, is applied to the grid of valve V_2 and causes a reduction in the anode current. If an equal and opposite voltage is applied to the valve from the potential divider P the anode current will be restored to its original value. The reading on the voltmeter V is then a measure of the peak voltage applied to the input terminals.

If the range switch is moved from the position S_1 to position S_2, only a fraction of the voltage appearing across R_1 is applied to the grid of the valve V_2. If S_2 is connected to a point, say, one-tenth the way along the resistance R_1 then the maximum peak voltage which can be measured will be ten times the voltage of the battery B_1.

It will be appreciated that the calibration of the instrument is independent of the voltage of the battery B_2. A seeming disadvantage, however, is that four batteries are used, viz., two filament and two H.T. batteries. This is not really serious as cycle lamp batteries are used for the filament supplies and 9-volt grid bias batteries for B_1 and B_2, the total cost of which is much less than would be the cost of a single H.T. battery for a reflex valve voltmeter of similar range.

As the negative terminals of batteries B_1 and B_2 are common, the potential divider can be connected to the battery B_2 and the battery B_1 can be dispensed with. This is generally satisfactory, but as the potential divider represents a variable load it is important that this should not cause any noticeable variation in the battery voltage as this might lead to a

World Radio History

Simple Valve Voltmeter—

slight error due to the balance point on the meter mA changing slightly during the measurement. The error is usually negligible if the current taken by the voltmeter is not more than, say, a milliampere. (The meter used by the author takes 0.5 mA for full-scale reading.) Where the load taken by the voltmeter is not negligible the initial reading on the meter mA with no input voltage can be checked, after balance has been obtained, by moving the switch in Fig. 2 from position S_3 to S_1, when the true balance position on the meter mA will be found. It will be noticed that this meter is also made to serve as the voltmeter, the resistance R_3 being substituted for the meter in order not to vary the load. After balance has been obtained the meter is switched to the potential divider and its reading noted.

As already mentioned, the reading on the voltmeter is slightly less than the peak voltage across C_1 (or the portion thereof selected by the range switch). For high accuracy a calibration curve may be drawn or the meter can be scaled to read volts directly. The calibration curve is substantially linear apart from a slight initial bend on the low range. The higher the resistance R_1 the closer will the voltmeter reading be to the peak voltage and, what is also important, the smaller the load taken by the instrument. The components R_2 and C_2 form a low-pass filter to reduce the high-frequency voltage appearing on the grid of the valve V_2. Suitable values for the various components are shown on the diagram. With the range switch on position S_1 the instrument measures from 0.1 to 9 volts peak and with the switch on S_2 the range is from 1 to 90 volts peak. If higher voltages are to be measured one can either use a higher voltage battery in place of B_2 or use a lower tapping on R_1. The upper limit is set by the diode valve V_1 and is usually not less than about 200 volts peak and may be much higher if a special valve is used.

An additional refinement is to have a coarse and fine adjustment on the potential divider. This has not been found necessary as the voltage can be adjusted to within about 0.05 volt using a single resistance, which is adequate for most purposes.

It is important that the condenser C_1 should have a high insulation resistance if the reading is not to be affected by D.C. potentials in the circuit to which the voltmeter is connected.

The construction of the experimental model (with cover removed) is shown in the photograph. R is the combined range switch and on-off switch; Z is the "check zero" switch and P is the potential divider. When balance is obtained the switch B-M is turned from "Balance" to "Meter" and the meter then shows the input voltage. The input terminals are shown at the left; those on the right are not normally used, being connected to the meter so that it may be used for other purposes.

V_1 is a 2-volt diode but a triode will serve quite well, the anode and grid being connected together. V_2 is a 2-volt valve of the small power class as a steep slope (i.e., high mutual conductance) is desirable for maximum sensitivity.

The cycle lamp batteries will comfortably supply 0.1 amp filament current for lengthy periods but 0.05 amp filament valves are, of course, preferable.

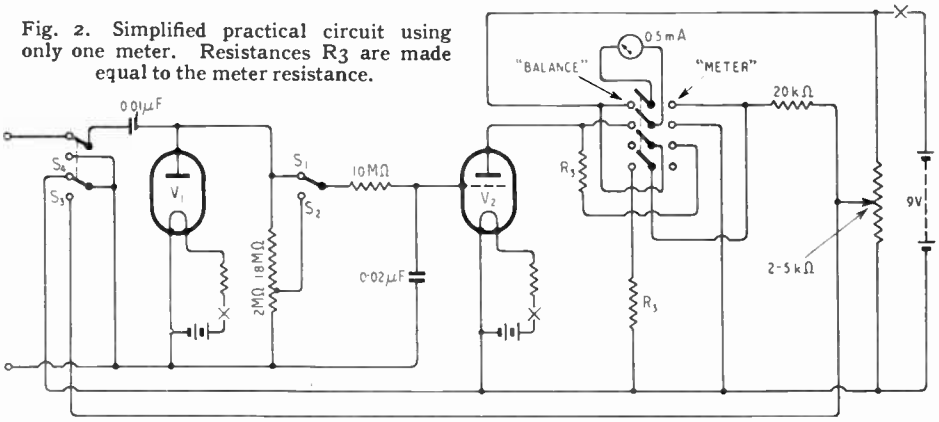

Fig. 2. Simplified practical circuit using only one meter. Resistances R3 are made equal to the meter resistance.

The author has found this type of voltmeter very convenient in cases where it is used only infrequently as the cost of a set of batteries is only 3s. Moreover, owing to their small weight the instrument is very convenient for field tests as it can be easily carried in one hand.

SENSITIVE PICKUP

A HIGH output is given by the "S.E.I." moving-coil pickup made by Southern Electronic Industries, Leigh-on-Sea, Essex. In conjunction with the coupling transformer supplied we found it capable of fully loading the output stage of a normal table model receiver when connected to the pick-up terminals.

Examination of the movement showed that the former upon which the coil was wound consisted of a long strip of magnetic material which could act as a flux-modulating armature. This would appear to be the main source of E.M.F. and it is debatable whether the output due to movement of the pickup coil itself justifies the addition of its mass to the movement. It is also debatable whether the description "moving-coil," already well defined by usage, is strictly applicable to this pickup. But the facts are that the coil does move, the output is comparable with that of a good moving-iron pickup, and no fault could be found with quality as judged by ear.

The tone arm is of cast aluminium mounted on plain bearings in which a distinct roughness could be detected in the particular model tested. A lug on the pivot pedestal acts as a rest when the pickup is withdrawn from the record turntable.

The price including transformer is £3 5s 3d plus 14s 6d purchase tax, and the distributors are Hamilton Marketing Supply Co., 50, Queens Road, Southend-on-Sea.

World Radio History

★ THE TREND OF MODERN ELECTRONICS ★

THE PINT VALVE

IN THE HALF-PINT GLASS

BRIMAR
BVA
VALVES
Bantam Range

STANDARD TELEPHONES AND CABLES LIMITED, FOOTSCRAY, SIDCUP, KENT.

World Radio History

THE GRAMOPHONE COMPANY LIMITED

BY APPOINTMENT TO HIS MAJESTY THE KING
SUPPLIERS OF GRAMOPHONES, RECORDS AND RADIO APPARATUS

H·M·V

RADIO *that is*

PRIMARILY A MUSICAL INSTRUMENT

"HIS MASTER'S VOICE" radio combines unique qualities—primarily a musical instrument steeped in the finest musical tradition of "His Master's Voice", yet engineered with the skill that has produced wonders like the Emitron Television Camera and the electronic miracles of the "H.M.V." war programme. Good things like "H.M.V." sets take time to make so you may have to wait a little for some of the new models. In the meantime, keep touch with your local "H.M.V." Radio dealer. He is usually the most reliable dealer in your district, and he will tell you when he has some new "His Master's Voice" models to show you.

THE GRAMOPHONE COMPANY LIMITED, HAYES, MIDDX.

World Radio History

NOISE FACTOR

2.—Methods of Measurement : Sources of Test Signals

By L. A. MOXON, B.Sc., A.M.I.E.E.

IN the first part of this article (Dec. 1946 issue) theoretical justification was given for revision of established ideas of signal/noise ratio when dealing with very weak signals. It was shown that "noise factor," or the number of times by which the *available* signal power from the aerial must exceed the *available* thermal noise power (KTB) of the aerial to give unity signal/noise power ratio at the input to the detector, gives a more fundamental basis for comparing receiver performance than the older methods of expressing sensitivity as "x milli volts input for y milliwatts output." We now come to the question of measurement.

Possible methods of measuring noise factor fall into two groups, (a) those using a continuous-wave signal generator, and (b) those using noise sources.

In C.W. methods a signal of known available power P_s, is fed into the receiver from an impedance equal to that of the aerial from which the set is intended to work. The detector of the receiver must be replaced by, or in some way converted into, a device for measuring power ratios.

The required procedure is to adjust the gain of the receiver, with the signal generator off, so that a convenient level of noise power is indicated. If the signal generator is now switched on and P_s adjusted so that the total power indicated is doubled, the noise factor, by definition, is equal to P_s/KTB. Where K = Bolzmann's constant, T = absolute temperature, and B = energy bandwidth. It is not of course essential to make the signal power equal to the noise power at the detector; if it is m times the noise power, the following rather more general expression obtains:

$$N_R = P_s/mKTB \quad .. \quad .. \quad (3)$$

So much for the principle of the method. Two aspects require further discussion, namely the determination of m (whether unity or otherwise), and the calibration of the signal generator.

No difficulty arises in determining m if the detector is replaced by a thermocouple or a bolometer bridge, which can be easily calibrated at low frequency, or even D.C., in terms of relative power. This is often rather inconvenient and it is tempting to try and "make do" with the detector itself as the power indicating device. If the detector is a diode, a milliammeter can be connected in series with the load, and in the case of a leaky-grid or anode-bend rectifier a backed-off meter can be used to detect small changes in anode current. Provided the detector is accurately "square law," i.e. if the current change is proportional to the square of the input voltage, no difficulty arises; a certain meter reading is obtained from noise alone, and $(m + 1)$ times this reading is obtained from noise plus signal. With other detector laws however, the detector may behave a little differently according to whether it is fed with C.W. or noise, and this is likely to cause appreciable errors even if the law itself is accurately known. At present the rated accuracy of signal generators, at the low levels required, usually leaves scope for uncertainty to the extent of at least 4 to 1, or 6 db, in power output. It has been customary to accept a corresponding variation of receiver sensitivity as reasonable, although comparable variations at the transmitting end are condemned as serious faults. In the case of a radar set, and for communication in the absence of interference, receiver noise factor is just as important as transmitter power output and there is a clear need for much greater measuring accuracy than ± 6 db. In achieving a high degree of accuracy with a C.W. signal generator, there are three main problems involved;

(a) the signal is necessarily generated at a high level and elaborate screening and filtering is necessary to prevent stray radiation which can cause appreciable errors, even if not otherwise detectable, by combining in phase or antiphase with the wanted signal;

(b) measurement of signal power must be taken at high level because of the insensitivity of measuring devices and the measured power attenuated, by a large amount say 80 to 100 db, which must be known to the nearest db even for an accuracy of ± 26%;

(c) the power measuring device must be calibrated at low frequency and designed so that the frequency error is either negligible or calculable.

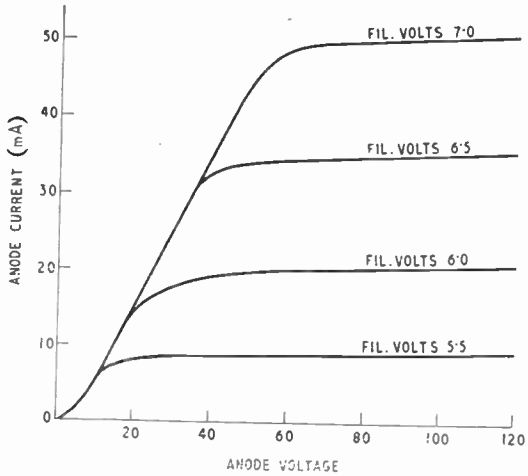

Fig. 1. Typical family of characteristics for a temperature-limited diode.

Enough has been said to indicate

World Radio History

Noise Factor—

that the problem is rather formidable, at any frequency. It is not insoluble, and even at centimetre wavelengths a fairly high degree of consistency has been obtained between signal generators having different sorts of power measuring device and different

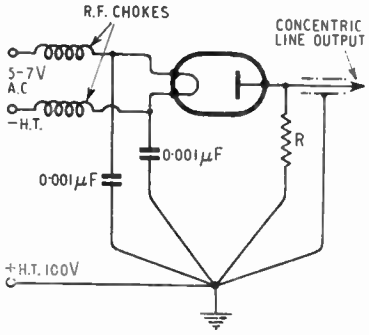

Fig. 2. Basic circuit of typical diode noise source.

forms of attenuator.[5] It can be inferred from this that the degree of absolute accuracy achieved must be fairly high.

If the C.W. signal generator is replaced by a device which generates a known amount of noise, all the difficulties listed above disappear. In addition there is no need to know the energy bandwidth, and no difficulty arises in allowing for the characteristics of the detector.

The Noise Diode

The noise source in most general use is the temperature-limited diode. If sufficient voltage is applied to the anode of a diode to draw all available electrons away from the cathode, any further increase of anode voltage has no effect on current, no space charge is formed, and the diode is said to be temperature-limited. The anode current then has a random or "noise" component i_n given by $i^2_n = 2eIB$ where e is the charge on an electron (equal to 1.59×10^{-19} coulombs) and I is the anode current in amps. If i_n flows through a resistance of R ohms, the noise power available from the terminals of the resistance, additional to its thermal noise is therefore $\frac{1}{2}eIBR$. The impedance of the diode is in parallel with R but is usually at least 20,000 ohms in normal circumstances. If R corresponds to the aerial impedance, $\frac{1}{2}eIBR$ can be substituted for P_s in equation (3), and we find that $N_R = \frac{eIR}{2mKT}$. Taking T = 293°K and making $m = 1$, the noise factor is given accurately by :—

$$N_R = 20IR \quad .. \quad .. \quad (4)$$

Alternatively, expressed in decibels,

$$N_R = 10 \log_{10} 20IR \quad .. \quad (5)$$

The hotter the cathode, the more electrons are available and the greater the anode current, so that adjustment of I is made by varying the filament current; Fig. 1 is a typical family of diode characteristics, and an important practical point to be noted from this is that the anode voltage must be sufficient to ensure that the saturation level, or temperature-limited region, is reached at the highest anode current required. Failure to attend to this

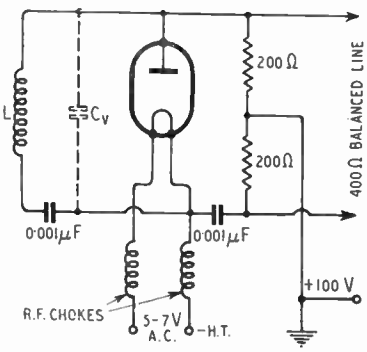

Fig. 3. Noise diode arranged to feed balanced line. Valve capacity is tuned out by L.

point usually reveals itself by a decrease of noise with increase of anode current, because when space-charge is present it exerts a smoothing action on the noise. The extent of the smoothing is difficult to calculate accurately and the space-charge limited region, i.e. that part of the characteristic below the "knee," is therefore unsatisfactory for noise generation.

In selecting a valve for use as a noise diode, two points require to be borne in mind :—

(1) Oxide-coated cathodes are unsatisfactory under temperature-limited conditions. Thoriated filaments have been used successfully, but to be safe a pure tungsten filament is desirable.

(2) The upper frequency limit for satisfactory operation is set by inter-electrode capacity, internal lead lengths, and electron transit-time, as explained below. The valve recommended for the purpose is the CV172 which was specially developed for it, but if this is not available any valve with a suitable filament can be connected as a diode and used subject to frequency limitation.

A typical noise diode assembly using the CV172 is illustrated in the photographs and its circuit diagram is shown in Fig. 2. An alternative circuit suitable for testing a receiver designed to work from a 400 ohm balanced feeder is shown in Fig. 3; in this case valve capacity is important because of the higher load impedance, and is tuned out by the inductance L. Other arrangements are likely to suggest themselves to the reader as required. It has been found most convenient to use a compact diode assembly, separate from its power pack, and to incorporate in the latter the anode current meter and the filament rheostats. It is useful to have two rheostats one for coarse and one for fine control. The rated maximum anode current of the CV172 is 30 mA, and this gives an available power of 24 KTB from 40 ohms which is the smallest resistance likely to be used. A safe voltage, to ensure saturation, is 100 V.

To determine m, a meter can be used to read detector current, or any other convenient indication of noise power may be used. If the maximum noise power available from the diode is large com-

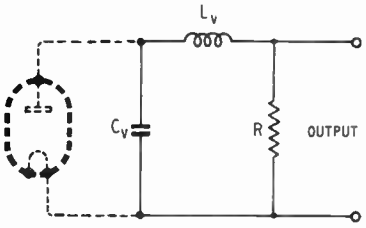

Fig. 4. Equivalent circuit of noise diode.

pared with the receiver noise, the gain may be turned down so that the latter is negligible, and the noise diode can be used to find two readings of the meter

[5] "Ultra-High-Frequency Measurements," by C. W. Oatley, I.E.E. Radar Convention Paper.

World Radio History

or other noise indicator which correspond to a 2 : 1 change of noise power. In practice it is only possible to obtain sufficient diode noise for this very simple procedure if N_R is small, R large, and the required degree of accuracy not very high; for other cases it is necessary to use a slightly more elaborate procedure as follows. With zero noise diode current, the receiver is adjusted to give a convenient meter reading, M_1 due to noise. From the definition of noise factor it is clear that this noise level is the same as if the receiver was perfect and the noise power available from the aerial was N_RKTB instead of KTB. The next step is to adjust the noise diode current to any convenient valve I_1, making available an additional noise power $2oI_1R \times KTB$, and increasing the meter reading to some value M_2 substantially greater than M_1 but taking care to avoid saturation of the receiver. The gain is now turned down appreciably and the diode currents I_2 and I_3 required to give the meter readings M_1 and M_2 respectively are observed. In the first case M_1 and M_2 correspond to a noise power ratio $\frac{N_R}{N_R + 2oI_1R}$ and in the second case to $\frac{N_R + 2oI_2R}{N_R + 2oI_3R}$, and since these two ratios must be equal we find that

$$N_R = \frac{2oI_1I_2R}{I_3 - I_2 - I_1} \quad .. \quad (6)$$

It is to be observed that if $I_1 + I_2$ is nearly equal to I_3, a small error in readings will make a large error in N_R, and this condition should be avoided as far as possible.

An equivalent circuit for the noise diode is shown in Fig. 4, in which C_v and L_v represent the inter-electrode capacity and lead inductance. Provided the operating frequency is well on the low frequency side of the resonance of L_v and C_v so that L_v can be ignored, no difficulty arises; it is true that with a large value of R, the capacity may exert a shunting effect, but this can be removed by tuning it to resonance with an external inductance such as L in Fig. 3.

At the resonance, if R is small compared with ωL, the volts across R are increased by $\omega L/R$, i.e. by the "Q" of the circuit. Since L_v and C_v constitute a series resonant circuit in parallel with R, the output impedance is merely the series resistance associated with L_v and C_v which may be very small; this means that the receiver is badly mismatched, but the available power is greatly increased. The net result is not amenable to calculation, since L_v and C_v are usually distributed in an obscure manner and not concentrated as shown. The practical importance of the effect is illustrated by the following experience. A CV172 noise diode was being used in the frequency range 200–220 Mc/s with a resistance of 40 ohms, and after a time it was suspected that measurements were optimistic to the extent of about 2 db. By adding an inch of wire in series with the resistance, thus increasing L_v, a further error of 6 or 8 db in the same direction resulted and the effect described was suspected. Measurement of the total capacity showed it to be 18 pF; this was reduced to 5 pF by removing the valve holder, the metal base of the valve, and a screen which had been placed over the valve. By adopting a skeleton construction with connections attached directly to the valve pins and with the assembly attached to and supported by a short length of the 40 ohms cable connecting it to the receiver the expected 2 db difference was obtained. It was later found permissible to replace the valve holder provided that metal was kept away from the valve and the leads to the resistance and blocking condenser kept as short as possible.

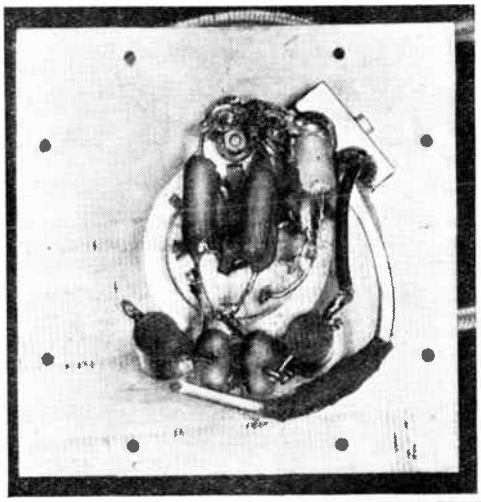

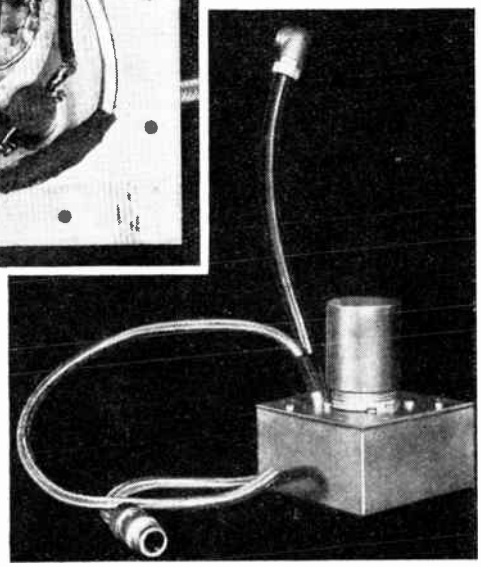

Screened noise diode assembly using the CV172. Filter chokes and condensers in supply leads are fitted close to the underside of the valveholder.

The other source of error which requires discussion is the effect of the transit time of electrons from cathode to anode, which reduces the noise power available at very high frequencies. A test to find out whether this is serious can be made very easily, since the higher the anode voltage the more quickly the electrons are accelerated and the shorter their transit time. It is only necessary, therefore, to change the anode voltage and see what happens; if increased voltage gives increased noise, then the effect is present. With the CV172, no trace of transit-time effect has been observed even at frequencies of over 300 Mc/s and the frequency limit for accurate measurements appears to be determined entirely

World Radio History

Noise Factor—

by the resonance effect, which puts it in the region of 250–300 Mc/s.

As an alternative to the noise diode, it is possible to use a metal filament raised to a high temperature.[6] It is necessary to arrange that this has the resistance value from which the receiver to be tested is designed to work, and the noise factor is then given by $(T^1 - T)$ T where T^1 is the temperature of the filament required to double the noise power at the input to the detector.

This method is attractive, but in comparison with the noise diode it has the disadvantages of much less available noise power, and the inconvenience of temperature measurement as compared with measurement of diode current. There is also a problem due to the variation of R with temperature, and although this can be overcome by the use of a suitable filament the temperature attainable may be further restricted in consequence.

Measurement of Aerial Noise Temperature

It has already been mentioned that the temperature corresponding to the noise power available from an aerial may be widely different from the 290° assumed in the definition of noise factor. It may be very simply measured with a noise diode, as follows; with the aerial connected, a note is made of the output noise reading. The aerial is then replaced by the equivalent resistance and noise diode, and the diode current I required to make the noise level the same as before is observed. By simple reasoning, the amount by which the aerial "noise temperature" T_a exceeds room temperature T_d is given by $20I_tRT_d$. It is convenient to calibrate the output meter in terms of aerial noise temperature using the relation

$$T_a = (20I_tR - 1)\ T_d \quad \ldots \quad \ldots \quad (7)$$

and it will be observed that there is no need to have any other knowledge of the detector characteristics.

The method is applicable provided T_a is greater than T_d. It is easily modified for the case when T_a is less than T_d, but this is of relatively little practical importance since the effect of the value of T_a on the receiver noise output power cannot then be greater than the ratio $(N_R - 1)/N_R$, and at the frequencies to which this applies N_R tends to be relatively large.

Unless T_a is fairly large compared with T_d, care must be taken to ensure that R is accurately equivalent to the aerial impedance, unless it can be verified that the receiver noise level is not critically dependent on input impedance, otherwise the change of noise level due to any mismatching will be recorded as a "temperature."

Noise Sources for Microwaves

Use has been made both of klystrons and specially-designed noise diodes for measuring noise factor in the region of 3,000–10,000 Mc/s. So far it has been necessary to calibrate these devices against some other form of signal generator, but the outlook for making absolute measurements with the noise diode up to 3,000 Mc/s or so is extremely promising.[7] The diodes used take the form of a tungsten filament mounted centrally in a narrow-bore copper tube about 10 cm. long, and transit time and other correction factors are amenable to calculation.

An alternative method is to use an I.F. noise source followed by a mixer which converts it to R.F. noise. If this mixer is identical with that in the receiver under test, and if the reciprocity condition holds, i.e. if the conversion losses from R.F. to I.F. and I.F. to R.F. are the same, then the total loss can be measured at I.F. and divided by two to get the loss in the first mixer. Precautions must be taken to get rid of image-frequency noise e.g. by tuning the local oscillators of the two mixers to opposite sides of the signal frequency, and sufficient accurately-known attenuation must be provided between the mixers to avoid undesirable interactions. A low-gain I.F. amplifier is required after the diode to make up for some of the losses in the above process.

This method has given good agreement with signal generators at frequencies up to 10,000 Mc/s and retains some, though not all, of the advantages offered by noise sources at lower frequencies.

Use has also been made of the hot-wire method at frequencies of the order of 3,000 Mc/s with some degree of success.

The development of noise sources has made it possible to measure noise-limited sensitivity with much greater accuracy than is usually obtainable with C.W. signal generators, and with very little trouble or expense. Apart from the value of the new methods to the professional engineer, it is felt that they are likely to make a special appeal to the amateur who is anxious to keep his receiver at the "top notch" of performance, but has hitherto been denied the necessary facilities.

Much of the substance of this article is the result of work carried out in the Admiralty Signal Establishment and in this connection the author wishes to acknowledge the help and encouragement of his colleagues. Publication is with the approval of the Board of Admiralty.

[6] Method due to Standard Telephones and Cables.

[7] Statement based on the work of Kompfner, Hatton, Schneider and Dresel, to be published in Proceedings at the Radiolocation Convention, *J.I.E.E.*

A.F. MILLIVOLTMETER

FULL-SCALE ranges of 15, 50, 150 and 500 mV and 1.5, 5, 15, 50 and 150 V are provided in the new audio-frequency millivoltmeter made by the General Electric Co., Magnet House, Kingsway, London, W.C.2.

The instrument consists of a two-stage amplifier with a gain of 100, stabilised by negative feedback, followed by a diode rectifier and a D.C. amplifier with degenerative action designed to eliminate errors due to change of valve parameters. The amplifier is arranged as a bridge circuit, and out-of-balance is indicated on a meter. The highest overload which can be applied to the meter is 100 per cent, and this can be safely carried by the moving coil.

Frequencies from 20 c/s to 20 kc/s can be measured with an accuracy of 3 per cent (full scale) on the assumption of a pure sine-wave input. The instrument indicates peak voltage, but is calibrated in R.M.S. It is A.C. operated and the consumption is about 50 watts at 200-250 V, 40-100 c/s.

The input capacitance is 20 $\mu\mu$F, and the resistive component of the input impedance is 1 megohm.

World Radio History

FIRST STEPS IN V.H.F. EXPLORATION

A Practical Super-regenerative Receiver

By "CATHODE RAY"

IN case anyone is thinking of telling "Cathode Ray" that he has become nothing more than an armchair philosopher, he hastens to say that he is quite aware that the intellectual delight of studying modern radio developments is not fair compensation for the loss of practical experience. So here, for a change, is something to do at home. Something not too difficult as a knock-up after being out of the game for years and years.

And it is in response, too, to the interest shown by so many readers in my notes on the super-regenerative receiver (June, 1946). As I pointed out then, the great merit of the super-regen is that it gives so much for so little. Most people no doubt realize how much the focus of interest has shifted to the very high frequencies, and may want to explore them, but hesitate to embark on constructing elaborate equipment with very meagre practical information. The super-regen is just the thing. The valve requirements could hardly be less—one solitary triode, of almost any reasonable type. And the rest—a handful of components obtainable with almost equal ease from the pre-war junk box or the post-war dealer.

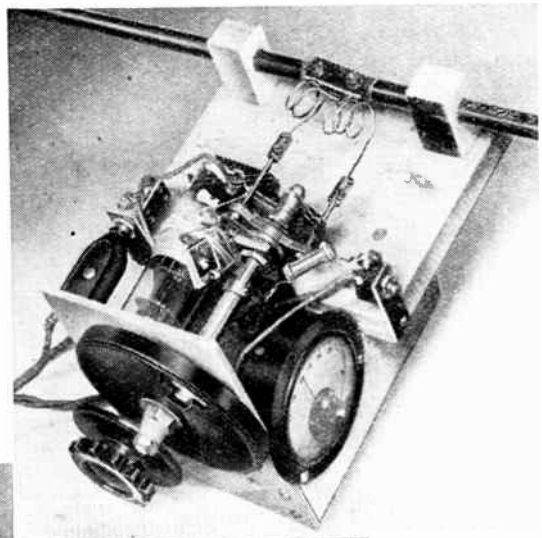

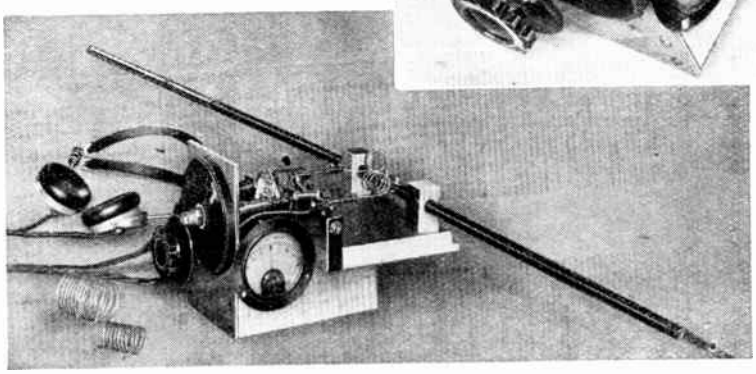

An extemporized V.H.F. super-regenerative receiver.

It has other advantages besides cheapness and ease of construction. The sensitivity is extremely high; yet there are no critical adjustments or setting-up. The selectivity is so low that tuning is quite as easy as on the medium broadcast band. Fortunately high selectivity of V.H.F. is seldom needed—yet—on most of the bands. The unfairly maligned background noise not only indicates when the set is working properly, but simplifies tuning to unmodulated carrier waves, which show up as "holes" of silence. Finally—and this may be news to some—it works with either amplitude modulation or frequency modulation, and indicates which is which. So altogether it is just about ideal for a preliminary survey of the V.H.F. band.

To forestall scornful merriment, may I explain that the particular embodiment of the super-regenerative principle shown is of rough bread-board construction, lashed up from a few scraps of

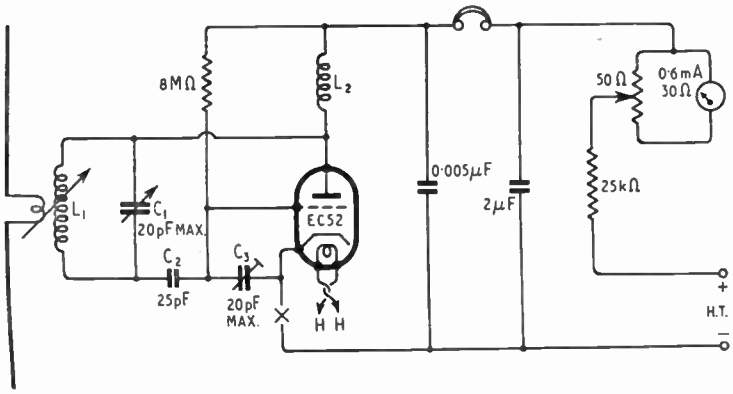

Fig. 1. Circuit diagram of the receiver shown above.

World Radio History

First Steps in V.H.F. Exploration— wood and components that happened to be around. There is no reason why anybody who wants a more finished looking job should not enclose it in a tastefully designed case; in fact, if it is to be used out of doors, or in a car, that would be the sensible thing to do. There is plenty of latitude as regards the circuit and the component values, and especially the power supply. For this particular set, with a consumption of 0.43 A at 6.3 V and about 0.5 mA at 80 V, an A.C. mains unit was rigged up from spare components (including an old Class B driver transformer) to the circuit shown in Fig. 2. Possible alternatives, according to the sphere of action and the triode used, are:—

(i) Battery L.T. and vibrator H.T. } Convenient in a car.
(ii) Battery L.T. and H.T. } Convenient in a car.
(iii) A.C.L.T. and battery H.T.
(iv) Tappings off the power supply of a broadcast receiver or A.F. amplifier used to obtain loudspeaker reproduction.

In the last case the super-regenerative receiver can be regarded as a V.H.F. adapter, its output being suitably connected to the gramophone terminals of the main set.

Fig. 1 is the circuit diagram of the receiver. The meter is not essential, of course, but is very useful for calibration and for tuning the aerial. Most triodes can be made to work over the low-frequency half of the V.H.F. band, but if one wants to pursue the exploration up to or beyond the 300-Mc/s limit the choice is more restricted. An acorn will do, of course; and so will the Mullard EC52, which is the type shown in the photograph.

The circuit is a self-quenching Colpitts oscillator. The optimum quenching frequency is not critical, but increases with the radio frequency. Taking the grid leak to +H.T. raises the Q.F. and at the same time encourages quenching. In fact, with a high-slope valve, like the EC52, quenching may be rather excessive, as shown by the anode current falling to perhaps only 0.1 mA. So the small pre-set condenser C3 is used to control oscillation.

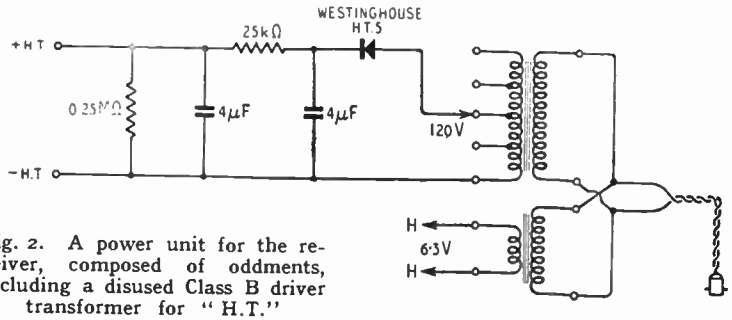

Fig. 2. A power unit for the receiver, composed of oddments, including a disused Class B driver transformer for "H.T."

Although a geared tuning drive is shown, it is not really essential. But it *is* necessary to use a non-conducting extension spindle, since neither side of the tuning condenser is earthy.

Tuning inductors, L1, are pieces of bent wire held in screw connectors on the supports of the variable condenser. Examples:

37-57 Mc/s: 9 turns 2 cm dia, 3.5 cm long.

65-100 Mc/s: 4 turns 1.7 cm dia, 2.3 cm long.

90-140 Mc/s: 1 turn 4 cm dia.

110-170 Mc/s: Short circuit.

The first includes the Alexandra Palace sound and vision (41.5 and 45 Mc/s respectively) and the second the B.B.C. experimental F.M. on about 90 Mc/s and police transmitters (which, of course, on identifying, one will, in accordance with the terms of one's licence, immediately tune out!).

For higher frequencies, the policy to adopt is to eliminate leads in the tuning circuit, to remove C3, and, if necessary, to cut out C1 altogether, tuning by means of a variable C2.

The choke L2 is not critical; the one used here has about 70 turns of 40 S.W.G. on a ¼-in tube. If moving the phone and power leads about provokes signs of affecting the tuning, another choke may be inserted at X.

Aerial Arrangements

The most satisfactory dipole aerial is one constructed of a pair of tubular metal telescopic camera tripod legs. Not only do they contract to a reasonable size when out of use, but their length can be adjusted to resonate at any frequency over a wide band. The top ends are provided with lugs through which screws can be passed to serve as terminals for a coupling coil of one or two turns and also to hold strips of insulating material as a mechanical support (Fig. 3). The legs are attached to the baseboard by blocks of wood with holes that are a tight enough fit to be secure, but allow the dipole to be twisted in them so as to vary the coupling with the tuning coil.

When the set is switched on, the anode current first rises; then drops once at the start of oscillation, and again at the start of quenching. The characteristic rushing sound can then be heard. If only one drop occurs, oscillation is not fierce enough to quench itself and appropriate action—such as raising the H.T. or reducing C3—must be taken.

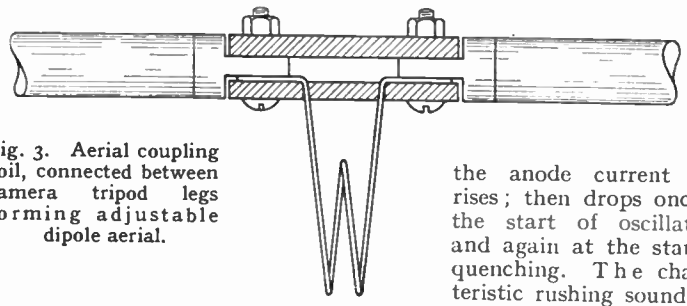

Fig. 3. Aerial coupling coil, connected between camera tripod legs forming adjustable dipole aerial.

The easiest way to calibrate the

World Radio History

tuning scale is with an absorption wavemeter, held no closer to L1 than is necessary for the meter to show a perceptible flicker when the wavemeter is tuned through resonance. Lacking a wavemeter covering the desired band, one can make one by mounting a pair of parallel wires, say 1 in apart, and bridging them at two places separated by a distance equal to 0.48 λ. One end of this long rectangular-shaped loop of wire is brought near L1, and C1 is varied until absorption is shown. But remember that this sort of wavemeter responds to harmonics of its fundamental wavelength.

The aerial is tuned in the same way, as if it were an absorption wavemeter, by noting the setting of C1 at which maximum absorption is indicated by the rise in anode current; and then shortening or lengthening the aerial rods as required. One can make sure that it is the aerial that is absorbing by touching one or both of its ends and seeing that the meter responds. If no meter is available, aerial resonance can generally be detected by a rise in noise. The aerial effectively covers a band of at least several Mc/s each side of spot tune, and brings in any but weak signals outside that band.

Aerial Exploration

The advantages of a tiny set that can be connected to its power source by long flexes, or direct to portable batteries, is that one can examine the polarization and direction of incoming waves by turning the aerial around in all directions. Alternatively, the aerial can be connected to an 80-ohm flexible V.H.F. twin-wire feeder, allowing the set to be fixed. In which case it is convenient for listening purposes to couple its output to the "Gram." socket of a broadcast receiver, through a transformer. A step-down of several-to-one is advisable. And, of course, when one is not interested in exploring fields (electromagnetic) the receiver can be connected by feeder to a fixed aerial on the roof or other elevated spot. But it is only fair to point out that such an arrangement is likely to radiate perceptibly over a sufficient radius for it to be deemed by the G.P.O. (and perhaps by neighbouring V.H.F. explorers) to be a transmitter.

This simple set demonstrates very effectively the relative immunity of the super-regenerative receiver from ignition interference, especially if a television receiver is available for comparison; and also its A.G.C. properties at all signal strengths great enough to suppress the background noise.

F.M. transmitters can be distinguished from A.M. because the modulation becomes almost or entirely inaudible when the receiver is tuned exactly to the carrier frequency. To hear it, the receiver has to be mistuned slightly either way, when the variations in transmitter frequency on the slope of the receiver response curve give amplitude variations. This ancient method may seem rather crude, and it is true that either the efficiency is small or the distortion is large (by very-high-fidelity standards). But the super-regen. is sensitive enough to stand some loss of efficiency, and makes no claim to high fidelity in any case.

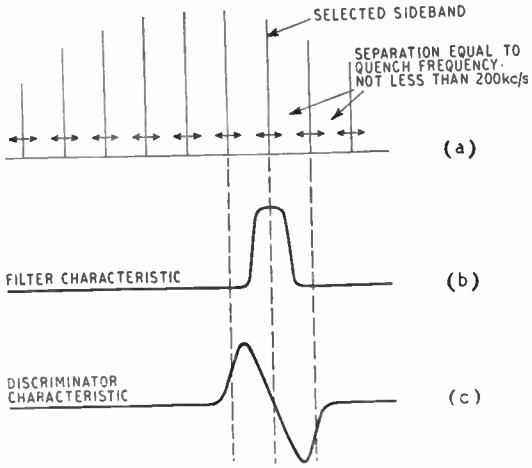

Fig. 4. In a super-regenerative F.M. amplifier, its frequency-modulated output sidebands (*a*) are transposed to a much lower frequency and passed into a filter (*b*) which selects one for applying to a F.M. discriminator (*c*).

While on the subject of F.M., it may be worth mentioning that a super-regenerative stage has been found very effective as an *amplifier*.*. I have not actually tried it in this rôle, but suggest it as an interesting line of experiment to follow the set just described when its possibilities have been exhausted. The theory, briefly, is that a super-regenerative oscillator is synchronized by an incoming signal of as little as 10 microvolts. Being modulated by the quenching, the oscillator has a series of sidebands spaced at intervals of f_q (the quenching frequency), so each of these is frequency-modulated by an incoming F.M. carrier. If f_q is considerably higher than the frequency deviation of the carrier—say 200 kc/s—so that any one sideband can be selected to the exclusion of all others, it can be applied to the usual F.M. discriminator (Fig. 4). In practice it appears to be necessary to use a frequency-changer to lower the frequency of the super-regenerative output. And a buffer stage is desirable in front to prevent radiation. So it begins to approach the orthodox superhet in complexity. But with an equivalent amount of gear it seems likely to have a higher sensitivity and freedom from ignition interference. (The ordinary F.M. receiver is not too good at coping with the latter; but a super-regenerative stage in front ought to reduce it to manageable proportions.)

Whether you ultimately go in for this fancy hybrid or stick to the plain superhet, however, the single-valve super-regen. is a good introduction to the V.H.F. band.

By no other means is it possible so easily and so cheaply to obtain first-hand knowledge of what is still *terra incognita* to many wireless men.

*Henry P. Kalmus, *Proc. I.R.E.* Vol. 32 No. 10 (Oct. 1944), pp. 591-600.

World Radio History

World of Wireless

VALVE PRICES

WHEN announcing the publication of the Report of the Central Price and Regulation Committee's investigation into the prices of valves, Sir Stafford Cripps stated that the findings did not disclose a case for special action to control prices at present, but they would be kept under review.

This report, which is published by the Stationery Office, price 2d, was made in response to a question in Parliament in November, 1945, as to whether the prices at present being charged for valves were fair or whether excessive prices were being maintained by restrictive practices.

The report, dealing with the structure of the valve industry and the functions of the British Radio Valve Manufacturers' Association, states that, before the war, 80 per cent of the valves manufactured by the nine member firms of the B.V.A. were sold direct to set manufacturers and that "the prices at which these sales are made do not cover in most cases their factory costs." The investigations show that "the public, through the prices they pay for replacement valves, are subsidizing the loss made by the manufacturers on sales to set makers."

The conclusion is drawn in the report that "If the level of profits earned by the manufacturers of any product is to be regarded as the objective test to be applied in considering whether the prices paid by consumers are fair prices, then we are of opinion that the prices at present charged for valves are fair."

AIR NAVIGATION

DISCUSSIONS were concluded in Montreal on November 23rd by the Radio Technical Division of the Provisional International Civil Aviation Organization (P.I.C.A.O.) on the various air navigational aids previously demonstrated by the U.K. and the U.S.A.

It was recommended that the American blind approach system, SCS-51, should be installed at all international airports as soon as possible, at the latest by the end of 1950. This system, of which the Pye "ABAS" is a modified version, employs independent beams to give horizontal and vertical approach planes and shows the pilot by cross-pointer meters his landing path.

American "Loran" was considered to meet most of the requirements for long-range navigation and it was recommended that existing Loran stations should be retained with all other long-range systems at present in use until such time as a standard system is adopted. Loran is to be installed for the N. Atlantic region by January, 1949, and in four other regions by 1951.

Both the U.K. and U.S.A. have undertaken to oppose the standardization of equipment which would give national or commercial monopolistic control over production.

A correspondent who was present at the meeting sends us his personal impressions. He writes:—

It was obvious before the meeting that the relative merits of Gee and American V.H.F. omni-directional radio range, with associated distance - measuring equipment, would be the principal bone of contention. Part of the U.K. delegation were in favour of Gee, but the support they hoped to have from Commonwealth and Empire delegates was conspicuously unenthusiastic. Perhaps through internal dissentions. The British supporters of Gee failed to present a convincing case to the meeting. They were unable to give many worthwhile and highly relevant facts about the system, such as number of stations required, cost, availability of gear.

As the conference progressed it became obvious that there was not to be any world-wide demand for the high degree of accuracy obtainable from Gee. Except for the U.K., every other country represented stated in open session that a lesser degree of accuracy was fully acceptable for meeting any reasonable operational need.

RADIOLYMPIA

THE Radio Industry Council announces that the proposed 1947 National Radio Exhibition will be held at Olympia from October 1st to 11th. This exhibition will provide the first opportunity for the industry to display to the public its achievements in overcoming the difficulties of reconversion.

MIDLAND TELEVISION STATION

THE recent announcement by H. L. Kirke, head of the B.B.C.'s Engineering Research Department, that a site had been selected just north of Birmingham for a Midland television station has been described by the B.B.C. as a little premature. It is, however, stated that a number of sites is being considered, but no decision has yet been reached.

B.B.C. CHARTER

THE Government has renewed the B.B.C.'s Charter for a further five years and, as stated in the Editorial, the changes introduced are trivial. They concern largely finance and administration.

Whilst the B.B.C. will receive 85 per cent of the revenue from licence fees for "the conduct of the Home and Television Services," it will receive each year "such sums as the Treasury shall authorize" for the overseas services and may borrow up to £1,000,000 for the extension of its services.

The B.B.C.'s annual report shows that its revenue from publications amounted to £687,836—7.64 per cent of the total. Over 29 per cent (£2,639,001) of the year's expenditure concerned engineering.

With the renewal of the Charter a new Chairman of the Board of Governors—Lord Inman—has been appointed.

TRANSATLANTIC 6 METRES

WHAT is thought to be the first 6-metre amateur signals to span the Atlantic were heard by H. O'Heffernan at his station, G5BY, in South Devon on Sunday, November 24th, at 16.16 G.M.T.

Contact had been established on the 10-metre band with W1HDQ operated by E. P. Tilton, West Hartford, Conn., who is on the staff of the A.R.R.L., and as conditions seemed propitious for 50-Mc/s communication the American station changed to that frequency. Signals were peaking at R8/9 and remained audible up to 17.20 hrs. Later another British amateur, D. W. Heightman, G6DH, of Essex, also heard W1HDQ.

As a result of this test arrangements have been made for the A.R.R.L. station, W1AW, to transmit daily from 13.00 G.M.T. on 50-52 Mc/s using C.W. telegraphy.

COMPONENT EXPORTS

COMPONENT manufacturers are to be congratulated on their effort to bring British radio components to the notice of overseas buyers by the publication of an elaborately produced comprehensive and informative reference book of manufacturers and their products.

The catalogue has been prepared as a joint endeavour through the Radio Component Manufacturers' Federation by whom it is issued from its offices at 22, Surrey Street, London, W.C.2.

World Radio History

BROADCAST STATION LIST

A LONG-FELT need is met by the publication of a 48-page booklet giving details of well over 1,000 long- medium- and short-wave broadcasting stations.

Compiled by *Wireless World* this booklet, entitled "Broadcasting Stations of the World," contains frequency and geographical lists of some 240 medium- and long-wave stations in Europe and of some 800 short-wave stations of the world.

Issued by our Publishers, Iliffe & Sons Ltd., it is obtainable from booksellers or direct from Dorset House, Stamford Street, London, S.E.1, price 1s (postage 1d).

E.M.I. GIFT TO R.S.G.B.

IN the presence of many well-known personalities connected with telecommunications and the amateur movement a presentation was made recently of a wireless transmitter and auxiliary equipment by Sir Ernest Fisk, managing director of Electric and Musical Industries, to the Radio Society of Great Britain.

The transmitter is similar in design to one produced for the Services, but it has been modified to meet the particular needs of amateur communication. It is capable of giving 300 watts R.F. output on any frequency between 1.5 and 20 Mc/s, either by crystal control or by use of a frequency stabilized V.F.O.

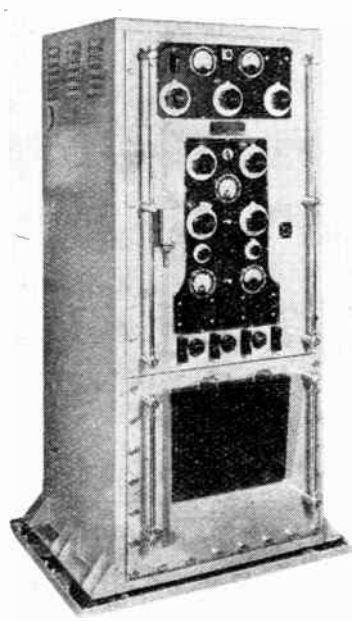

E.M.I. 300-watt transmitter presented to the R.S.G.B.

PERSONALITIES

Sir Robert Watson-Watt, C.B., F.R.S., has been awarded the Valdemar Poulsen gold medal by the Danish Academy of Technical Science.

Air Commodore W. C. Cooper, C.B.E., M.A., who recently retired from the R.A.F. after 24 years' service, has been appointed manager of the Beeston and Sunderland factories of Ericsson Telephones, Ltd. He has held various appointments in the Radio Department of the Royal Aircraft Establishment, Farnborough, and the Ministry of Aircraft Production. From July, 1945, until his retirement he was Director of Communication Equipment, M.A.P. Air Commodore Cooper is a member of the I.E.E. and is on the council of the Brit.I.R.E.

Professor C. L. Fortescue, who retired from the position of head of the Electrical Engineering Department of the Imperial College of Science and Technology in September, has had the title of Professor Emeritus conferred on him by the University of London.

Dr. W. R. G. Baker, vice-president of the General Electric Company, Schenectady, has been elected president of the American Institute of Radio Engineers in succession to Dr. F. B. Llewellyn.

Dr. F. C. Williams, O.B.E., D.Sc., D.Phil., has been appointed successor to Prof. Willis Jackson as Edward Stocks Massey Professor of Electrotechnics and Director of the Electrotechnical Laboratories in Manchester University, where he was lecturer prior to the war. He was a member of the Scientific Civil Service from 1939 to 1946, during which time he was concerned with the development of radar. His researches include work on fluctuation noise in amplifiers and diode rectifiers.

J. W. Murray has been appointed to the Colonial Service as a broadcasting engineer in Northern Rhodesia. He joined the B.B.C. in 1939 and had previously held appointments with International Marine Radio Co., Kolster-Brandes and Marconi's.

G. S. Miller, B.Sc.(Eng.), who has been with the B.B.C. since 1934, prior to which date he was with Westinghouse, has been appointed to the Colonial Service as a senior broadcasting engineer in the Malayan Broadcasting Department.

K. Richards, who has been associated with Cossor's instrument department for twelve years, has left to take up the position of manager of the scientific instruments division of Bartle and Co., of Johannesburg, South Africa, who are Cossor agents.

IN BRIEF

British Standards.—A synopsis of each of the current 1,300 British Standards, together with a subject index, is given in the 1946 Year Book of the British Standards Institution which is obtainable from the B.S.I. Publication Sales Department, 28, Victoria Street, London, S.W.1, price 2s, including postage.

Physical Society's Exhibition.—The Physical Society has planned to hold the 31st Exhibition of Scientific Instruments and Apparatus from April 9th to 12th, in the Physics and Chemistry Departments of Imperial College, South Kensington, London, S.W.7.

Practical War Memorial.—An eight-acre estate at New Malden, Surrey, has been given to the I.E.E. Benevolent Fund by C. W. Speirs, J.P., a member of the Institution for nearly 50 years, and will be used in the Institution's scheme to provide homes for beneficiaries of the Fund as a War Memorial. Some £10,000 has already been promised or subscribed to the Fund.

Scientific Journals.—Preparations are being made for the publication of the third edition of the "World List of Scientific Periodicals," the last edition of which, covering the period 1900-1933, included the titles of over 33,000 journals, and the holdings of some 180 libraries in Great Britain and Ireland. Further information can be obtained from the Secretary, World List of Scientific Periodicals, c/o The Zoological Society of London, Regent's Park, London, N.W.8.

German Patents.—Over 70,000 specifications covering wartime developments in German industry and research are now available for inspection at the Patent Office Library, 25, Southampton Buildings, Chancery Lane, London, W.C.2. Photographic copies of specifications and drawings may be obtained at the rate of 6d per page.

Electron Jubilee.—To mark the fiftieth anniversary of the discovery of the electron by Sir Joseph Thomson, O.M., next year the Institute of Physics and the Physical Society are arranging a series of meetings in London on September 25th and 26th, 1947. An exhibition, which will remain open to the public for several weeks will be held at the Science Museum, South Kensington.

Foire de Paris.—The radio section of this year's Paris Fair, which is to be held from May 10th to 26th, is to occupy more space than hitherto. No details are as yet available regarding allocations of space. Particulars are available from the Fair's London Representative, Miss E. Lambert, 11-13, Rugby Chambers, 2, Rugby Street, W.C.1. Tel.: CHA 6794.

Marine Navigation.—The first of two booklets recording the work of the International Meeting on Radio Aids to Marine Navigation, held in London in May, 1946, has been published by the Stationery Office, price 2s 6d. It gives a verbatim report on the discussions and demonstrations. The chief scientific and technical papers presented to the Meeting will be published separately.

Official prices to be allowed for receivers taken in part exchange for new sets are given in the little booklet "Official Used Radio Set Values, 1946-1947 Season," compiled by the Radio and Television Retailers' Association and its affiliated associations in Scotland and Northern Ireland, which is published by *The Wireless and Electrical Trader*. Members of these organizations can obtain copies from

World Radio History

World of Wireless—

the R.T.R.A., but non-members should apply to *The Trader*. Distribution of the book, which costs 2s, including postage, is confined to *bona-fide* members of the trade.

L.C.C. Television Course.—The South-East London Technical Institute, Lewisham Way, S.E.4, has arranged a course of twelve lecture-demonstrations on Television Practice, commencing on January 16th, the fee for which is £1. A syllabus is obtainable from the Institute's Electrical Dept.

Export figures for October show that the 54,500 receivers exported from this country was the highest number ever recorded. Compared with the 1938 figure, it is an increase of 750 per cent.

Shipwrights' Exhibition.—*Wireless World* and a number of associated journals will be displayed on the stand of our Publishers, Iliffe and Sons, at the Shipwrights' Exhibition to be held in the Hall of the Royal Horticultural Society, Westminster, S.W.1, from January 28th to February 8th.

Wireless for the Blind.—The Christmas Day appeal for the British Wireless for the Blind Fund will be made by Anthony Eden, M.P. Manufacturers are now able to supply the receivers ordered by the Fund and the number issued since its inception is 74,148.

INDUSTRIAL NEWS

Allander Industries, Ltd., has moved to a new factory with a floor area of 65,000 sq ft at 48, Avenue Street, Bridgeton, Glasgow. Tel.: Bridgeton 2117.

Vidor.—Export enquiries regarding Vidor products should now be made to 9-10, Pancras Lane, Queen Victoria Street, London, E.C.4. Tel.: CEN 4592.

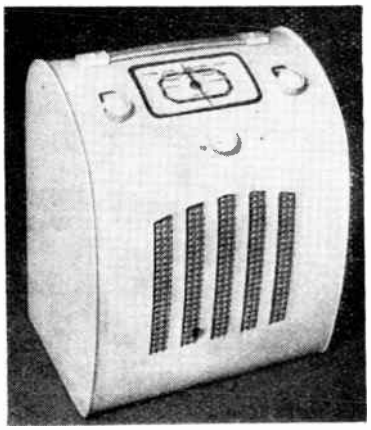

AN UNUSUAL cabinet design in wood and plastic has been adopted for the Ever Ready Model "C" all-dry transportable. Dimensions are 12½in × 10in × 7½in and the 4-valve superhet circuit covers the medium and long wavebands. The set is made by The Ever Ready Co. (Gt. Britain), Hercules Place, Holloway, London, N.7, and the price is £11 11s. plus £2 13s. 9d. purchase tax.

Frank Murphy of London, Ltd., is to establish a radio factory on a site at Fazakerley, Liverpool, instead of at Hitchin, Herts. The change in location has resulted from the Government's request for the diversion of industry to the Development Areas.

Dale Electronics: A Correction.—In the advertisement of Dale Electronics, Ltd., in our December issue, the price of "The Radio Handbook" should have been given as 12s 6d; not 12s as printed.

"The Circle" is the name of the new magazine published by Pye, Ltd., of Cambridge. The choice of the title of the magazine has been influenced by the Pye circular trade mark.

CLUBS

Exeter.—Readers in, and around, the City who are interested in the formation of a short-wave club are invited by E. G. Wheatcroft to get in touch with him at 7, Mount Pleasant Road, Exeter.

Farnborough.—Details of the recently formed R.A.E. and Farnborough District Radio Society are obtainable from the secretary, P. R. Burkett, G4PS, Park View, Priory Street, Farnborough, Hants. The next meeting will be on January 6th at 7 in the R.A.E. Assembly Hall.

Harrow.—The recently formed Radio Society of Harrow meets on alternate Tuesdays at 7.30 at the Northwick Tea Rooms, 206-208, Kenton Road, Harrow. Sec.: J. F. A. Lavender, G2KA, 29, Crofts Road, Harrow, Middx.

Leeds.—Originally formed in February, 1945, by ex-signallers of the 30th Battalion, Duke of Wellington's Home Guard, the Benton Radio Club is now open to interested amateurs. The club meets on Thursdays at 8.0 at its new headquarters in Benton Park, Rawdon. Its call sign is G5QQ. Secretary, D. N. Freeman, Deristan, Harrogate Road, Rawdon, Leeds.

Maidstone.—Meetings of the re-formed Maidstone Amateur Radio Society are held in the club's headquarters at the rear of 244, Upper Fant Road, Maidstone, on Wednesdays. The club's station, G3WM, is expected to be operating very shortly. Secretary, T. D. Eaves, G3AGV, Ashmore, Ashford Road, Maidstone, Kent.

Portsmouth.—The South Hants Radio Transmitting Society, which was re-organized a year ago, now meets on the first Thursday of the month at the Cosham Civic Centre at 7.30. Secretary, J. S. K. Stephens, G8WC, 65, Ebery Grove, Copnor, Portsmouth, Hants.

Thames Valley.—Meetings of the Thames Valley Amateur Radio Transmitters' Society have restarted and will be held on the first Wednesday of the month at the Carnarvon Castle Hotel, Hampton Court, at 8. The January meeting, however, will be held on the 8th. Secretary, D. R. Spearing, G3JG, Thurston, Orchard Way, Esher.

Watford.—The Watford and District Radio and Television Society's 40 members now meet twice a month—on the first and third Tuesday—at the Carlton Tea Rooms, 77a, Queens Road, Watford, at 7.30. Sec.: J. C. Warren, 20, Market Street, Watford, Herts.

Wigan.—A series of lectures and discussions has been arranged for the coming months by the Wigan and District Amateur Radio Club which meets alternate weeks at its headquarters, 30, Darlington Street, Wigan. Sec.: H. King, 2, Derby Street, Wigan, Lancs.

York.—At the first meeting of the York and District Short-wave Club in November eight members were present. Enquiries from prospective members should be sent to the secretary, G. W. Kelley, G5KC, 146, Melrosegate, York.

MEETINGS

Institution of Electrical Engineers

Radio Section.—"Crystal Valves," by Dr. B. Bleaney, J. W. Ryde and T. H. Kinman, on January 15th.

"Radio Versus Line," discussion to be opened by A. H. Mumford on January 21st.

Ordinary Meeting.—"Industrial Applications of Electronic Techniques," by Dr. H. A. Thomas, on January 16th.

The above meetings will be held at 5.30 at Savoy Place, London, W.C.2.

Cambridge Radio Group.—"A Standard of Frequency and Its Applications," by C. F. Booth and F. J. M. Laver, on January 7th.

"Ultra-High-Frequency Measurements," by C. W. Oatley, on January 28th.

Both Cambridge Group meetings will be at 6.30 at the University Engineering Laboratory.

London Students' Section.—"Radio Transmitting Valves," by A. Mason, on January 8th at 7 at Savoy Place, London, W.C.2.

British Institution of Radio Engineers

North-East Section.—"The Boundary between Sinusoidal and Relaxation Oscillation," by Dr. E. Williams, on January 8th at 6.0 at Neville Hall, Westgate Road, Newcastle-on-Tyne.

Scottish Section.—"Modern Receiver Design," a discussion to be opened by C. F. Lines on January 15th at 6.30 at the Heriot-Watt College, Edinburgh.

London Section.—"Pulse Technique," by M. M. Levy, on January 16th at 6.0 at the London School of Hygiene and Tropical Medicine, Keppel Street, London, W.C.1.

Midlands Section.—"Pulse Technique," by M. M. Levy on January 23rd at 6.45 at the Coventry Technical College.

British Sound Recording Association

The annual general meeting, followed by a conference and exhibition, on January 25th at 2.30 at the Royal Society of Arts, John Adam Street, London, W.C.2. A limited number of tickets is available for non-members from R. W. Lowden, 3a, Pembroke Buildings, Camberley, Surrey.

British Kinematograph Society

"New Developments in Sound Technique and Equipment," by B. C. Sewell, on January 22nd at 7.15 at the Gaumont-British Theatre, Film House, Wardour Street, London, W.1.

Institute of Physics

Electronics Group.—"Semi-conductors," by Prof. H. S. W. Massey, of London University, on January 28th at 5.30 in the Rooms of the Royal Society, Burlington House, London, W.1.

World Radio History

LETTERS TO THE EDITOR

Long-range Super-regen. ◆ "Le Self de Choc" ◆ B.B.C. Transmission Quality

Super-regen. in St. Helena

RESULTS from the super-regen. set described by O. J. Russell in your December, 1944, issue, have been so surprisingly good that perhaps you may be interested to hear of such a set being constructed in this remote corner of the South Atlantic.

Here one has to rely quite a lot on the junk-box. Fortunately I had an Eddystone "Microdenser" and some Frequentite valveholders and a standard Eddystone 6-pin coil former was cut down for the inductance. The detector (or should it be squegger?) is a Tungsram P215 and is mounted in a horizontal position right up against the tuning condenser and coil to keep leads as short as possible. The L.F. transformer coupling the P215 to the output Osram KT2 was built up from scrap. The tuning range is roughly 10 to 12 metres and the B.B.C. 11-metre transmission is well received as well as amateur 'phone on 10 metres.

Now that the B.B.C. are using the 11-metre band all sets for overseas should tune down to at least 30 Mc/s.

J. H. JAMESON.

St. Helena, S. Atlantic.

French Terms of English Origin

I WAS interested to read the paragraph devoted by my friend "Diallist" in your December number to the words borrowed by French technicians from the radio-electrical vocabulary of English. As this question is of some concern to me, may I clear up a few points?

Since science and technology are international, the English and the French have naturally had to borrow terms from one another. That we may describe as an exchange of politeness. But a distinction must be made between legitimate borrowings and those which are reprehensible.

"Diallist" mentions the word "self." This hateful word belongs actually to technicians' slang (the correct French is *bobine, bobinage, enroulement*), as do *voltage*, instead of *tension, force électromotrice* or *différence de potentiel; broadcasting* for *radiodiffusion*, or—horrible to relate!—*self de choc*, for *bobine d'arrêt*. This last expression is an adaptation of choke coil; but *choc* means "clash" or "shock."

Equally to be deprecated are such French expressions as *contrôle de volume, contrôle de tonalité* (tone), or *grille* (grid) *de contrôle*. Unlike the English verb "to control," the French verb *contrôler* does not mean to regulate or to take charge of; it means to check or to verify. Words of similar appearance but different meanings are unreliable friends!

On the other hand there are English terms which have acquired full rights of citizenship in France. Fading, pick-up and push-pull are examples.

Insufficient knowledge of English and of the resources of French is sometimes responsible for useless and even absurd borrowings. An instance is that of the journalist who some time ago spoke quite seriously of "*Courants de Eddy*"—from the name of the English physicist who discovered them!! Now, the French for eddy currents is *courants de Foucault*. This time we really are concerned with the celebrated French physicist who demonstrated the rotation of the earth by his pendulum experiment.

That calls to mind the other writer who spoke of *fil de Litz*, from the name of the German scientist who had invented it! This free translation of the German *litzendraht* is rather too free; *litze* means "strand" and *draht* "wire."

Paris. E. AISBERG.

The Calculus and Decency

I HAVE been following with approval and profit the excellent series of articles by "Cathode Ray." It is most important that points such as he raises should be thrashed out and thoroughly understood. I am therefore rather dismayed to find such an arch "debunker" giving support, even by implication, to what should by now be a hoary fallacy. Let me quote from his October article. Apropos of finding the mean value of a sine wave he writes: "One way is . . . . by measuring the area between it [the curve] and the baseline, and then dividing by the length of the base. Unless one has a planimeter, that is so tedious that it may be less trouble to learn the integral calculus and *do it the proper way* . . . ." (my italics).

This is the ancient and fallacious belief, come down from the Greeks, that it is much more gentlemanly to obtain one's answer by nice clean intellectual processes than by manual toil or the use of a machine. However intellectually satisfying, an answer obtained by exact algebraic methods is no more "proper" than one obtained by numerical methods, provided these methods are sufficiently accurate to give that answer within the limits of experimental error. The only factors which should decide between them are those of convenience and expediency in any given case. Where the "exact" solution is straightforward, there is usually no call for numerical methods. But when the exact solution is unwieldy or does not exist there is no excuse for the refusal to resort to numerical solutions.

The persistence of teachers in perpetuating the belief among their students that there is something not quite "nice" about a numerical solution, that it is a device no honest worker uses unless it is absolutely forced upon him, involves many a man in the unnecessarily tedious use of clumsy "exact" solutions. What is worse, it has held up the development of the necessary machines. These prejudices are being slowly overcome, but if "debunkers" of the calibre of "Cathode Ray" would join the battle, progress would become more rapid.

E. M. CROOK.

Harpenden, Herts.

["*Cathode Ray*" *writes*:—

MAY I venture to suggest that my remark about "doing it the proper way" was somewhat Shavian in character? At least, it seems to have provoked an anti-Shavian reaction.

And E. M. Crook himself answers his own criticism of me by saying that "where an exact solution is straightforward there is usually no call for numerical methods," so there seems no need for me to defend myself. Nevertheless, on the general question of the propriety of different methods of doing things, the question of a fallacy hardly arises. It is not a fallacy either to assert or deny that the proper way for an invited guest to enter a house is through the front doorway. In the case under discussion, preference for the calculus could be defended on the following grounds:

(1) Brains are much more commonly available than measuring instruments; everybody has one.

(2) It is vastly quicker to get an exact solution using the calculus

World Radio History

Letters to the Editor—

than an approximate one by measuring areas.

(3) Time spent on learning the calculus is much more worth while in the long run.

But I use numerical methods so much in the pages of *Wireless World* that I would hate to disagree with E. M. Crook's argument that no moral stigma should attach to anyone who uses them whenever they are convenient.—ED.]

Standard Valves

IT is not without interest one notes there is to be a "standard" range of valves. It is difficult, however, to appreciate what purpose another complete new range of valves, added to the multitudinous types already existing, is to serve.

It has long been an ardently felt need drastically to reduce the number of existing types and all their stupid alternatives (the nomenclature of which, in many cases, is meaningless), but how yet another range is to achieve this is hard to see.

Surely, what is needed is a standard range of valves, on a brand new base if you will (but why not the octal?) to be direct substitutes for most of the existing types. It cannot be beyond the wit of man, to devise adaptors converting side-contact, 5- and 7-pin UX bases to the standard base as, for instance, has been done in the case of the obsolete "all-dry" side contact range, to permit direct substitution of the new range without recourse to valve-base changing?

It would appear that the new contemplated range of valves instead of improving matters makes confusion worse confounded.

J. SPARROW.

Woodbridge, Suffolk.

Quality of B.B.C. Transmission

DURING the past two or three months I have had personal discussions with some hundred or more readers of *Wireless World* on the never-failing topic of high-fidelity reproduction. It is very encouraging to find how enthusiastic your readers continue to be for this honoured cause, in spite of the difficulties under which they have to work. The overwhelming difficulty is the wretched quality of the B.B.C. transmissions. Your correspondence pages have many times drawn attention to the deplorable distortion often present, but one hoped that the end of the war would see the end of it. Not so. There is no audible improvement whatever, and no grounds for hoping for an improvement, since I have discovered that the all-pervading smugness within the Corporation itself, presumably attributable to the absence of competition, smothers individual protests from the technical staff.

As I am economically interested in high-quality transmissions, since my living depends on being able to supply apparatus which could reproduce them without distortion, I felt it desirable to endeavour to estimate how bad this raw material of my trade really was.

Ignoring recorded programmes, which are beneath the notice of any serious engineer, I have found that an exact copy of the average B.B.C. news bulletin or talk can be provided when the amplifier is arranged to give a cut of 10 db at 3,000 c/s and 30 db at 5,000 c/s. On speech from a studio where a play is being broadcast, conditions are much better, there being a sensibly level output up to about 6,000 c/s. This test was taken with a radio receiver which was certainly not more than 2 db down at 10,000 c/s, and in London. I understand that conditions in the provinces are much worse.

To check harmonic distortion content, I introduced distortion into the amplifier to an extent equal, in sound output, to that of the majority of distorted transmissions (about 90 per cent of the whole). Measurement of this distortion afterwards, in the usual way with a sine-wave input checked on a C.R.O., showed the distortion to be of the order of 15 to 18 per cent 2nd and 3rd.

The B.B.C. did remarkably well before the war, and showed a real interest when well-supported complaints reached them. They could even do well some two years ago, as witness the remarkable broadcasts from the Bedford Corn Exchange. Even now, a tiny proportion of the broadcasts are very good. Why, then, must we put up with so much muck?

The old excuse that commercial sets are so bad that it doesn't matter is unjustified, as several manufacturers are now seriously interested in high-fidelity reproduction as a commercial proposition. I am quite sure that I am not the only person who can produce much more realistic music from records than I can from an average B.B.C. transmission, but it seems to me that when a public monopolistic corporation is so lost to all sense of its duty to the public, it is time that the public started hitting back. All we seem to be in prospect of receiving for the exorbitant increase in licence fee is a broadcasting service of which the technical shortcomings are on a par with the efforts of a third-rate suburban cinema. H. A. HARTLEY.

London, W.6.

PREVENTING CORROSION IN STEEL CHASSIS

Advantages of Electro-plating with Tin-Zinc Alloys

RESEARCH into methods of preventing corrosion in mild steel chassis for radio equipment used under "tropical" conditions, has confirmed the superiority of electro-deposited tin-zinc alloys over either of the constituent metals. Cadmium, which gives excellent protection against humidity alone, cannot compete with tin-zinc alloys in salt spray tests or in polluted industrial atmospheres.

The results of extensive corrosion tests are given in *Tin and Its Uses*, October, 1946, the review issued by the Tin Research Institute, Fraser Road, Greenford, Middlesex. Alloys with between 50 and 80 per cent tin show the highest resistance, and 80/20 tin-zinc are recommended for coating radio chassis. Where the coating is required to withstand mechanical damage a 50/50 alloy is recommended, as it is found that this can be scratched through to the bare steel without provoking rust.

It is known that a zinc coating is active chemically and protects the underlying metal by a kind of sacrificial action. Tin, on the other hand, has high intrinsic resistance to corrosion but cannot prevent the initiation of rusting at pin holes or scratches in the coating. Alloys of the two metals appear to combine the advantages of both constituents.

Details of the plating process are given and it would appear that a fairly wide latitude is permissible in the control of working conditions and the composition of the bath. Anodes of the same composition as the required deposit are used. For most purposes a coating 0.0005in thick is adequate and this is deposited in about half an hour at a current density of 15 amps/sq ft.

The coating takes solder easily and can also be "filmed" to give increased resistance to severe corrosion conditions by dipping in chemical solutions which impart a transparent layer of metal oxide or chromate.

World Radio History

VACUUM CONDENSERS

Their Mechanical Design and Electrical Characteristics

By H. A. H. GRIFFITHS, A.M.I.E.E., M.Brit.I.R.E.

THE principle of using vacuum as the dielectric for electrical condensers is not new, but it is only during the last few years that condensers of this type have been manufactured on a large scale.

The development of high-altitude aircraft has given rise to many problems, one of them being the design of associated electronic equipment which will maintain its efficiency under low atmospheric pressures and with wide variations of temperature and humidity. Aircraft operating at altitudes above 40,000ft, and in all climates, will experience temperatures ranging from +60° C to −50° C. With the rapid descent of aircraft from a high altitude into a humid atmosphere condensation will occur which may cover the surface of all equipment with a heavy film of moisture.

A correctly designed vacuum condenser will maintain its characteristics under these conditions, and at the same time will display the following advantages.

(1) A much smaller size than any other type of condenser (a vacuum condenser will occupy about one-tenth of the volume of a mica condenser having the same capacity and kVA rating).

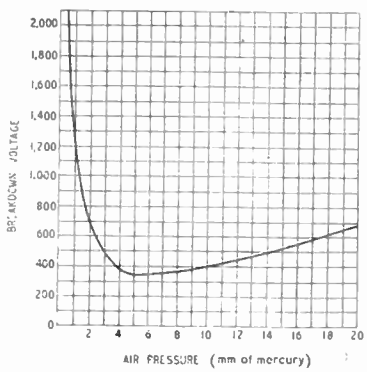

Fig. 1. Variation of breakdown voltage with air pressure. Electrode spacing 1 cm.

(2) A loss factor at least as good as the best air-dielectric condenser.

(3) Exceptional mechanical rigidity resulting in stable electrical characteristics.

Gaseous Dielectrics.—The potential necessary to cause breakdown in a gaseous dielectric is a function of gas pressure, and varies in the manner indicated in Fig. 1. The shape of this curve is explained by the fact that breakdown in a gaseous dielectric is due to ionization of the neutral gas particles by collision with electrons moving under the influence of the electric field, the tendency to ionization depending upon the mean free electron path. As gas pressure is reduced the mean free electron path is lengthened, giving greater velocity to the electrons, and so increasing the tendency to ionization. It is found that a certain pressure is reached, however, beyond which further reduction in pressure reduces the tendency to ionization due to the scarcity of gas molecules. The voltage at which breakdown occurs therefore decreases to a minimum as pressure is reduced, and then, as pressure is still further reduced, increases. The minimum breakdown voltage is independent of electrode spacing, and has a very definite value for any particular gas. In the case of air it is 342 volts.

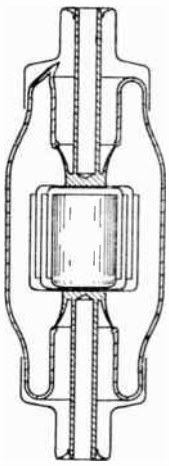

Fig. 2. Section of vacuum condenser showing large-diameter glass-to-metal seals and hollow cylindrical connecting leads.

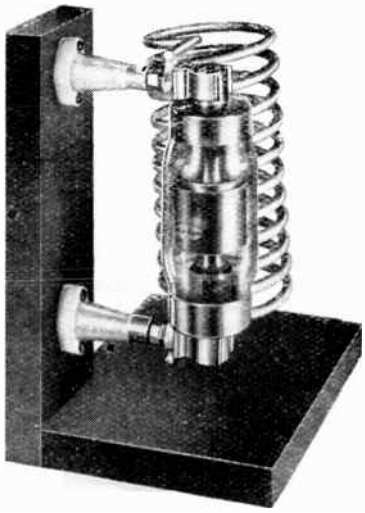

Typical vacuum condenser designed for use in radio heating equipment, and made by Vacuum Physical Laboratories.

Varying the electrode spacing only results in the minimum breakdown voltage occurring at a different pressure, but does not alter its value. If the pressure is reduced to a very low value where the gas particles are so few that ionization by collision is virtually impossible, extremely high voltages may be applied to the electrodes without causing breakdown. It is interesting to note experimental spark-overs have been made requiring a potential gradient of 6,000,000 volts/cm.

In the case of a practical vacuum condenser of the type shown in Fig 2, an operating potential of 25 kV peak is obtainable with an electrode spacing of 0.06 inch, and an air pressure of 0.001 mm of mercury.

To maintain this high vacuum it is essential that any metals employed for the electrodes or electrode supports, or, in fact, any metal included within the evacuated bulb, be of a type which does not give off occluded gas during the life of the condenser. In this respect tantalum is particularly suitable because of its property, after degassing, of absorbing rather than emitting further gas. The degassing process for vacuum condensers is similar to that employed in valve manufacture, except that due to the rather larger volume of metal in a condenser the process occupies

World Radio History

Vacuum Condensers—

a greater time. Breakdown potential is also a function of the electrode surfaces, which should be polished, and all edges should be well rounded, in accordance with normal high-voltage technique.

Power Factor.—There are two main factors which contribute to power loss in a condenser—(1) loss due to series resistance in the electrode structures, known as conductor loss, and (2) loss due to leakage across the surface and though the volume of the dielectric separating the electrode structures, and dielectric absorption, the combination of these being known as dielectric loss. Conductor loss is of greater importance at the higher frequencies, while dielectric loss has greater effect at lower frequencies. If the power factor due to any cause is other than zero, a current component in phase with the applied voltage will exist, the product of this in-phase current and the applied voltage giving the power loss, which must, of course, be dissipated as heat. This power dissipation will cause a temperature rise in the electrode structure if the power factor is due mainly to conductor loss, and in those parts of the dielectric which are subject to the greatest electrical stress if it is due mainly to dielectric loss. Any heat thus generated must be radiated or conducted away if the condenser is to remain at a safe temperature under operating conditions, and it may well be that this factor, rather than the minimum electrode spacing for a given operating potential, will ultimately determine the size of the condenser. If, to stress this point, an example is taken of a condenser having a capacity value of 50 pF, and a power factor of 0.01 per cent, it is found, from the expression, Power Factor $= R\omega C$, where R is equivalent series resistance, that at a frequency of 1 Mc/s, $R = 0.318\,\Omega$.

If then at 1 Mc/s the condenser passes a current of 8 amperes, power dissipation will be over 20 watts. Thus it is seen that in order to avoid an excessive temperature rise, care must be taken to reduce power factor to the lowest possible value.

Referring to Fig. 2, which is a sectional view of a typical vacuum condenser, it will be seen that the question of power factor has received careful consideration. Conductor loss has been reduced to a minimum by providing ample cross-sectional area for the electrodes and their terminations, and the large surface area provided limits the increase in resistance at high frequencies due to skin effect. The only dielectric, other than the residual gas, used in the condenser is the glass bulb, and by arranging the terminations at opposite ends, the dielectric path through the glass is as long as possible, and is of small cross-sectional area; consequently, dielectric loss is extremely low. One of the danger points of any R.F. high-current device of this nature is the metal-to-glass seal if, as is usually the case, the seal is also a current-carrying member. The seal is likely to fail if subjected to excessive temperature rise. It will be noticed that

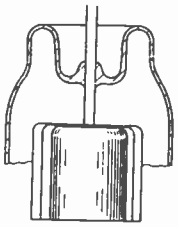

Fig. 3. Tungsten-glass seal in an early type of vacuum condenser. The small physical dimensions limit the rating of the condenser.

the terminations on the condenser illustrated are hollow. This feature is primarily for the purpose of accurate electrode alignment during manufacture, but it also provides a means of cooling the seals by means of an air blast, and so increasing the rating of the condenser.

Stability.—Capacitance stability is a function of mechanical rigidity, and it is for this reason that in the majority of vacuum condenser designs the electrodes take the form of concentric cylinders. This form also renders the condenser least susceptible to capacitance variation due to temperature change. The capacitance of two concentric cylinders is given by the expression.

$$C = \frac{Kl}{\log \frac{D}{d}}$$

where K = a constant
l = effective length of cylinders,
D = inner diameter of outer cylinder,
d = outer diameter of inner cylinder.

It is evident from this expression that if both cylinders are made of the same material so that all dimensions vary in proportion due to any change in temperature, then any change in C due to this cause will be proportional to change in l only. Also, this change in l will be compensated in some measure by the change in dimensions of the glass bulb. It is, in fact, possible by a suitable selection of materials and dimensions to obtain a condenser with zero temperature coefficient.

Referring again to Fig. 2, it will be seen that the metal is sealed into the glass on a large diameter. This type of seal is rather more difficult to manufacture than the more usual tungsten rod type of seal shown in Fig. 3, but it provides a much more rigid construction, and its advantages are particularly evident when the condenser is subject to vibration.

The end caps of condensers are arranged to fit standard fuse clips, making replacement a very simple matter, and enabling series or parallel combinations for higher potentials or for larger capacities to be easily built up. Their small dimensions and weight make it possible to mount condensers physically in the position in a circuit which theory demands.

The characteristics of the condenser shown in the photograph are:—

- Capacity values—5, 10, 25, 50 and 100 pF.
- Maximum rating (without air blast on seals)—60 kVA.
- Maximum R.F. current—30 amperes, peak.
- Maximum R.F. voltage—25 kV, peak.
- Power factor at 50 kc/s—0.01 per cent.
- Power factor at 50 Mc/s—(Too low to measure).

The particular application of vacuum condensers is, of course, in equipment for use under varying conditions of atmospheric pressure, humidity and temperature, quoted earlier, and their convenient design and small dimensions make them eminently suitable also for use in portable transmitters, high-frequency therapeutical apparatus, high-frequency heating equipment, and for many H.F. industrial applications.

World Radio History

BELLING-LEE QUIZ

(No. 7)

Answers to questions we are continually receiving by letter and telephone

Q. 28. *Is there a reasonably priced co-axial plug and socket for domestic use, one that is easily loaded without tricky tools?*

A. 28. Yes. A new sensible co-axial plug and socket has been developed by Belling-Lee and is now available. It is known as L.604, the price complete is 3/-, can be quickly loaded without soldering metal shield of cable, thereby avoiding damage to polythene insulant. Plug and socket members *snap* together. It can take cables from ⅛in. to ¼in. over shield and central conductor up to 0.04 in. The plug and socket together has a capacitance of 1.3 $\mu\mu$F. at 45 Mc/s. This plug is one of a range complying with a tentative specification of the Radio Component Manufacturers Federation for domestic television aerial connections, car radio, electronic test equipments, etc. The complete range will include socket on chassis, continuity of screen behind chassis and twin junction, etc.

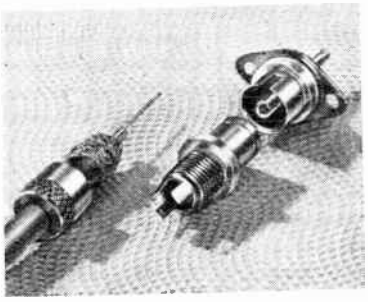

The new co-axial plug and socket manufactured by Belling & Lee Ltd. Capacitance of plug and socket together is 1.3 $\mu\mu$F at 45 Mc/s. Price 3/-.

Q. 29. *If I decide to have a good aerial either for broadcast reception or television, who will put it up for me? I have already discussed this with my dealer, who has not the necessary labour or facilities.*

A. 29. If you live within 25 miles of Charing Cross the Belling-Lee installation service will erect the aerial for you at a flat rate. Your dealer can get the full information on application to us. If you live further out, say, within fifty miles, the installation may still be carried out from London, but will be subject to a special charge. It would, of course, be of benefit to everyone if two or more installations can be arranged in the same district.

Q. 30. *Why will my dealer not undertake the erection of a high efficient aerial?*

A. 30. (1) Labour difficulties are very real (it is not a serviceman's job to clamber on roofs—it is a rigger's job, a man good at heights). (2) Your dealer may not have the necessary long ladders, and even if he has ordered them, he may not get delivery for a very long time owing to their being taken on building priority. (3) Long ladders need a car with special ladder racks. Your dealer may be unable to get delivery of such a car.

Q. 31. *Is there any likelihood of objections to the erection of a conspicuous aerial?*

A. 31. Very unlikely, but certain factors are well worth consideration.

(1) If you live in a semi-detached house and share a chimney stack, you should discuss the matter with your neighbour. If either of you are renting the house, the landlord's or agent's permission may be desirable, but we believe this is seldom asked for and hardly ever refused.

(2) If you live in a block of flats, you may have to obtain permission from the agent to have access to the roof.

(3) In certain unusual sites in the business area of London and other cities it is wise to discuss the matter with the District Surveyor. We are prepared to arrange such negotiations.

Q. 32. *Can you supply poles?*

A. 32. We are still unable to supply poles for all installations, but carry a small reserve which will be employed in certain cases and charged direct to the installation cost. When poles are in good supply they will again become a standard component of the aerial kits supplied.

PANEL FUSEHOLDER

FOR SAFETY

Off the SHELF DELIVERY

The body is moulded bakelite, taking up ⅞in. diameter on front of the panel from which it is insulated. It is one-hole fixing, non-rotating, spring loaded, and fitted with solder spills. The fuse carrier has moulded bakelite head with insert and is also spring loaded, all metal parts being silver-plated. Coin slot to facilitate withdrawal of fuse.

1¼in. 1 amp. fuse, or as required.

L.356. Price each **3/6**

Complies with

B.S.S. 646

up to 5 amps., at 250 volts A.C.

Known to be used with 20 amps. at 25 volts.

OTHER TYPES

L.575 Miniature panel fuseholder, without fuse. **2/4.**

L.1045/C3 Single Safety fuse box, with clip and fuse. **4/3.**

L.1033/C3 Twin Safety fuse box, with insulated back connections. **6/9.**

L.510 Single open fuseholder, with fuse. **1/8.**

L.1037 Flex fuseholder, with fuse. **2/6.**

Delivery from Stock

BELLING & LEE LTD
CAMBRIDGE ARTERIAL ROAD, ENFIELD, MIDDX

World Radio History

In phase with every musical mood

Study television at its source! ★

E.M.I. Research and Development *Laboratories were largely responsible for the Marconi-E.M.I. system of television transmission used by the B.B.C. Service—the first in the world.*

E.M.I. Factories *produce the finest television receivers in the world.*

E.M.I. Service *department is the largest and most expertly equipped in the country.*

★ *read about this new opportunity*

NOW—E.M.I. have set up a TRAINING ORGANISATION to provide immediate courses on practical TELEVISION (Postal and College Courses.)

SOON this new Training College will extend its syllabus to cover all branches of Electronic Science.

This is **your** opportunity to secure a thorough training in Television from the very pioneers of the Science.

Ask your local H.M.V. dealer for further details or send for our free pamphlet which gives full details of this and other courses.

E.M.I. INSTITUTES, LTD.

Dept. W.W.3 · 43 GROVE PARK ROAD · CHISWICK · LONDON · W.4

Associated Company of:
THE GRAMOPHONE CO. LTD.
("HIS MASTER'S VOICE")
THE MARCONIPHONE CO. LTD.
MARCONI-E.M.I. TELEVISION CO. LTD.
RADIOMOBILE LTD., ETC. ETC.

World Radio History

Design Data (10)

WIDE-BAND AMPLIFIERS

Multi-Stage Stagger-Tuned Couplings

TWO-STAGE amplifiers with stagger-tuning were dealt with in Design Data (3)[1] and single stages with coincident tuning in Design Data (2)[2]. A multi-stage amplifier can be made by the connection together of a number of such basic units, but this procedure does not necessarily lead to the highest overall amplification for a given bandwidth.

It is usual to specify the performance required of an amplifier as a voltage amplification at a bandwidth n to the 3-db points. This last means that the bandwidth is measured between the two points on the overall resonance curve at which the response is 3 db below the maximum.

If the amplifier is made up of a number of one- or two-stage units connected in cascade, the bandwidth for the individual units must clearly be measured at points where the response drops by less than 3 db in order that the sum of the drops in each stage may add up to the required overall 3 db. Thus, if three such units are used, each would normally be designed for a bandwidth n to the 1-db points.

Now the gain obtainable per stage depends not only on the bandwidth but also upon the response at the reference points. Changing from 3-db to 1-db reference points is equivalent to increasing the bandwidth at the 3-db points. It is an invariable fact that when an amplifier is built from a number of identical stages or multi-stage units, the gain per stage or unit decreases with the number of such stages or units for a constant overall bandwidth. This fact sets a limit to the possible amplification obtainable however many stages or units are connected in cascade; beyond a certain point, in fact, the addition of further stages will reduce the amplification.

This limiting amplification is easily reached with coincidence-tuned single-circuit couplings with bandwidths of the order needed for television. In the case of two-stage stagger-tuned units it is not easily reached under any likely conditions for present-day television. However, with wider bandwidths it might well become important.

It is not necessary to design an amplifier as an assembly of identical stages or units, however, and it can be designed as a whole for the required performance irrespective of the actual gains of individual stages. When this is done and bandwidth is achieved by stagger-tuning, it is a remarkable fact that the above limitation disappears and that the *average* gain per stage becomes independent of the number of stages.[3] It becomes exactly that of a single-stage coincidence-tuned amplifier. Such amplifiers are conveniently called optimum stagger-tuned amplifiers to distinguish them from those built up from a number of identical units. In general, all stages are different in the optimum condition.

From Design Data (2) it is easy to show that the amplification of a single coincidence-tuned stage is $A = 159g_m/nC$ where g_m is the mutual conductance (mA/V), C is the total circuit capacitance (pF), and n is the bandwidth (Mc/s) to the -3-db points. The overall amplification of an optimum stagger-tuned amplifier of N stages is thus $A_T = A^N$ for the same overall bandwidth to the -3-db points. This assumes only that the circuit capacitance is the same in all stages; if any individual stage has a different capacitance C_a, say, it is only necessary to multiply A_T by C/C_a to allow for it.

The derivation of equations for determining component values becomes increasingly difficult as the number of stages increases. One- and two-stage amplifiers have already been dealt with, for the coincidence- and stagger-tuned amplifiers of Design Data (2) and (3) can be regarded as one- and two-stage optimum stagger-tuned amplifiers.

Data is given here for three- and four-stage amplifiers, the latter being approximate. For more stages the derivation becomes formidable, and the simplest course is to revert to the unit principle. Since units of up to four stages are available, any amplifier of up to eight stages can be built with no more than two units, and of twelve stages with three units. The loss of overall gain for a two-unit amplifier as compared with optimum stagger is 7.6 db.

In reckoning the number of stages it must be remembered that the aerial-to-first grid circuit counts as a stage from the point of view of bandwidth but not from that of gain. In fact, the coupling does often give an important step-up of voltage, but the amplification referred to in the equations is that measured from the first grid.

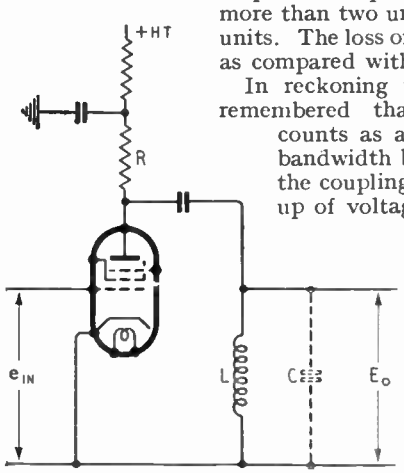

General

The circuit of a single stage has the coupling elements, R, L, and C, other components being decoupling and D.C. blocking, and so irrelevant to the present discussion. It is assumed that the A.C.

[1] *Wireless World*, April, 1946, Vol. LII, p. 125.
[2] *Wireless World*, March, 1946, Vol. LII, p. 90.
[3] "Performance of Coupled and Staggered Circuits in Wide-band Amplifiers," by D. Weighton, *Wireless Engineer*, October, 1944, Vol. XXI, p. 468.

World Radio History

Wide-Band Amplifiers—

resistance of the valve is very large compared with R and that the coupling capacitance is large enough to be ignored.

The amplifier has identical circuits in each stage but different values of L, C, R and g_m—the valve mutual conductance. The component values in the different stages are differentiated by subscripts 1, 2, 3, 4. Thus, g_{m1}, L_1, C_1, R_1 refer to the values of one stage, while g_{m2}, L_2, C_2, R_2 refer to the values of a second stage, and so on. The stages need not be used in any particular order.

Formulae for Three-stage Amplifier

$$C' = \sqrt{C_2 C_3}$$

$$R' = \frac{318\sqrt[6]{(S_n^2 - 1)}}{knC} \quad \ldots \quad (1)$$

$$f_r = f_m\sqrt{(1 - n^2/4f_r^2)} \quad \ldots \quad (2)$$

$$y = n/(2f_r\sqrt[6]{S_n^2 - 1}) \quad \ldots \quad (3)$$

$$a^2 = \frac{1 + 1.73\,y + 0.5\,y^2}{1 - y^2} \quad \ldots \quad (4)$$

$$k = 1 - \frac{3n^2/f_r^2}{8\sqrt[6]{(S_n^2 - 1)}} \quad \ldots \quad (5)$$

$$L = 24{,}400/f_r^2\,C' \quad \ldots \quad (6)$$

$$\left.\begin{array}{l} L_1 = L\,C'/C_1;\quad R_1 = C'R'/2C_1;\ f_{r1} = f_r; \\ L_2 = L\,a^2C'/C_2;\ R_2 = C'R'a/C_2;\ f_{r2} = f_r/a; \\ L_3 = L\,C'/a^2C_3;\ R_3 = C'R'/aC_3;\ f_{r3} = f_r a; \end{array}\right\} (7)$$

$$A_T = g_{m1}\,g_{m2}\,g_{m3}\left(\frac{159}{nC}\right)^3\sqrt{S_n - 1} \quad \ldots \quad (8)$$

In most cases the correction factor k is negligibly different from unity.

Formulae for Four-stage Amplifier

$$C' = \sqrt{C_1 C_2}$$

$$R' = \frac{416\sqrt[8]{(S_n^2 - 1)}}{nC'} \quad \ldots \quad (2)$$

$$f_r = f_m\sqrt{(1 - n^2/4f_r^2)} \quad \ldots \quad (3)$$

$$y_1 = n/(2f_r\sqrt{S_n^2 - 1}) \quad \ldots \quad (4)$$

$$a_1^2 = \frac{1 + 1.207\,y_1^2 + 1.414\,y_1\sqrt{1 - y_1^2/4}}{1 - 1.707\,y_1^2} \quad (5)$$

$$a_2^2 = \frac{1 - 1.207\,y_1^2 + y_1\sqrt{1 - 2.9\,y_1^2}}{1 - 1.707\,y_1^2} \quad \ldots \quad (6)$$

$$L' = 24{,}400/f_r^2C' \quad \ldots \quad (7)$$

$$\left.\begin{array}{lll} L_1 = \dfrac{L'a_1^2C'}{C_1}; & R_1 = \dfrac{R'a_1C'}{C_1}; & f_{r1} = f_r/a_1; \\ L_2 = \dfrac{L'C'}{C_2a_1^2}; & R_2 = \dfrac{R'C'}{a_1C_2}; & f_{r2} = f_r a_1; \\ L_3 = \dfrac{L'a_2^2C'}{C_3}; & R_3 = \dfrac{R'C'a_2}{2.414C_3}; & f_{r3} = f_r/a_2; \\ L_4 = \dfrac{L'C'}{C_4a_2^2}; & R_4 = \dfrac{R'C'}{2.414\,a_2C_4}; & f_{r4} = f_r a_2; \end{array}\right\} (8)$$

$$A_T = g_1g_2g_3g_4\left(\frac{159}{nC'}\right)^4\sqrt{S_n^2 - 1} \quad \ldots \quad (9)$$

Examples

Consider a four-stage amplifier with identical valves and capacitances ($g_{m1} = g_{m2} = g_{m3} = g_{m4} =$ 6 mA/V; $C_1 = C_2 = C_3 = C_4 = 30$ pF) to operate at 45 Mc/s with a bandwidth of 6 Mc/s at -3 db. Then $C' = 30$ pF; $R' = 416/(6 \times 30) = 2.31$ kΩ; $f_r = 45$ Mc/s; $y_1 = 0.066$; $a_1^2 = 1.106$; $a_1 = 1.053$; $a_2^2 = 1.068$; $a_2 = 1.034$; $L' = 0.4$ μH. Then from (8), we have $L_1 = 0.442$ μH; $L_2 = 0.363$ μH; $L_3 = 0.427$ μH; $L_4 = 0.375$ μH; $R_1 = 2.43$ kΩ; $R_2 = 2.19$ kΩ; $R_3 = 1$ kΩ; $R_4 = 0.93$ kΩ; $f_{r1} = 42.6$ Mc/s; $f_{r2} = 47.5$ Mc/s; $f_{r3} = 43.6$ Mc/s; $f_{r4} = 46.5$ Mc/s. From (9) the overall amplification is $[6 \times 159/(6 \times 30)]^4 = 5.3^4 = 780$ times.

Suppose now that a gain of 5,000 times is required under the same conditions. How many stages will be needed? With the bandwidth, capacitance, response and valve specified, the stage gain is 5.3 times irrespective of the number of stages. Ideally, therefore, $5.3^N = 5{,}000$ where N is the number of stages.

It is easier to work in decibels. An amplification of 5.3 times is 14.5 db and the required gain of 5,000 times is 74 db. Therefore $N = 74/14.5 = 5.1$ stages.

Five stages give 72.5 db, only 2.5 db below the requirement. We have no method of determining the component values for five ideal stages, but we can use one two-stage and one three-stage amplifier in cascade each designed for -1.5 db response at the edges of the band. This causes a loss of 3.8 db from the ideal in each amplifier reducing the gain by 7.6 db to 64.9 db, or 9.1 below the requirement.

It is, therefore, advisable to use six stages in the form of two three-stage amplifiers in cascade, each being designed for -1.5 db response at the edges of the pass-band. The gain will then be $6 \times 4.5 - 7.6 = 79.4$ db; nearly 6 db more than is needed. If this is excessive it can easily be reduced by slightly overbiasing the valves.

Symbols

R' = equivalent circuit resistance
C' = equivalent circuit capacitance.
n = bandwidth $= f_2 - f_1$
S_n = ratio of $\dfrac{\text{response at } f_r}{\text{response at } f_1 \text{ and } f_2}$
f_r = frequency of maximum response (f_{r1} = resonance frequency of stage 1, etc.)
f_m = mid-band frequency
f_1 = lower limit of pass-band $= f_m - n/2$
f_2 = upper limit of pass-band $= f_m + n/2$.

AMATEUR CALL BOOK

THE "Radio Amateur Call Book," the publication of which was discontinued during the war, is again being issued quarterly. The contents of the latest issue (autumn, 1946) includes the calls, names and addresses of the amateurs in the ten districts of the U.S.A.—occupying 189 pages (8⅝in by 11¾in)—and those of transmitters in some seventy other countries. About 1,800 British stations are included in the current issue of 276 pages. A map showing amateur prefixes throughout the world and a tabulated list of prefixes are also included.

Copies of the Call Book can be ordered from Dale Electronics, Ltd., 105, Bolsover Street, London, W.1, who will arrange for them to be sent direct from the United States. The annual subscription for the four issues is 30s. Individual copies cost 8s 9d. Prices include postage.

World Radio History

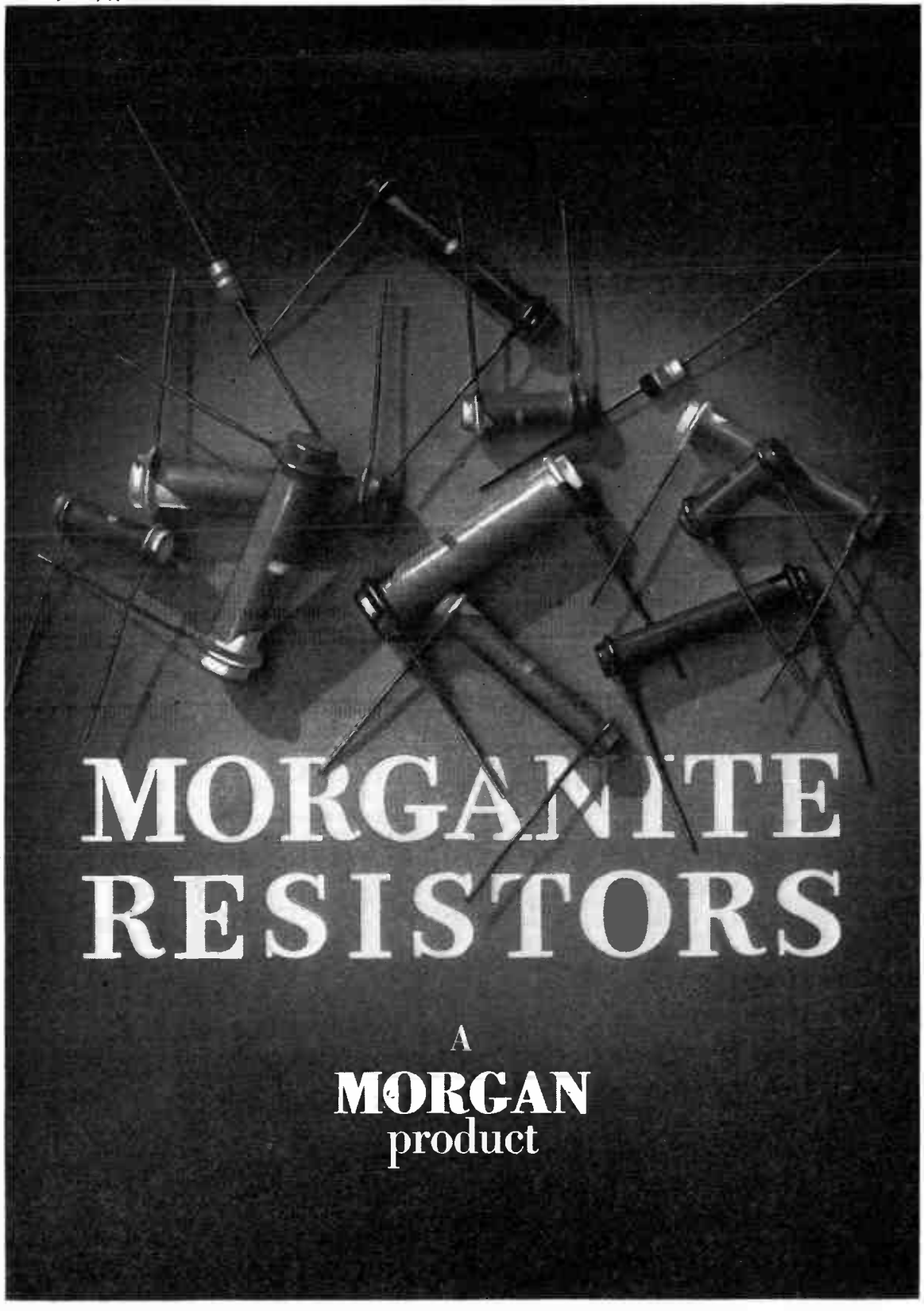

World Radio History

Hear the *Decola* DE LUXE

Because the Decola is unique in technical and constructional concept, and sets a new standard for electric record reproduction, we have pleasure in inviting readers of the " Wireless World " to examine and hear this revolutionary new instrument at any of the following Showrooms, where, by arrangement with the Decca Record Co., we shall display circuit and general layout details, which, together with the results of the demonstration, will, we believe, give the discriminating wireless technician full confidence to recommend the Decola to his music loving relatives and friends.

BARNSLEY
Joshua Marshall & Co. Ltd., 9/13, The Arcade.
BIRMINGHAM
Murdoch, 155, Corporation Street.
BLACKBURN
Pickering & Sons, 77, Darwen Street.
BRADFORD
Murdoch, 37, Market Street, Swan Arcade.
BRIGHTON
Murdoch, 137, Western Road.
CAMBRIDGE
Murdoch, 20, Regent Street.
CHATHAM
Murdoch, 86-88, High Street.
COLCHESTER
Murdoch, 1, Headgate.
DONCASTER
Archibald Ramsden, York House, Cleveland Street.
DOVER
Murdoch, 27, Biggin Street.
FOLKESTONE
Murdoch, 20, Sandgate Road.
IPSWICH
Murdoch, 22, Butter Market.
KING'S LYNN
Murdoch, 19, High Street.
LEEDS
Hopkinsons' Successors, Ltd., 5-6, Commercial Street.
Archibald Ramsden, 38a, Boar Lane.
LONDON
Murdoch, 461-3, Oxford Street, W.1.
MAIDSTONE
Murdoch, 7, High Street.
MANCHESTER
Vivian Grant, Ltd., Tudor Galleries, 69, Deansgate.
MIDDLESBROUGH
Waddington & Sons, Ltd., 108, Linthorpe Road.
NEWCASTLE
Waddington & Sons, Ltd., Metrovick House, Northumberland Road.
NEWPORT (I.o.W.)
Murdoch, 31, High Street.
PORTSMOUTH
Murdoch, 218, Commercial Road.
PRESTON
Murdoch, 81, Fishergate.
ST. ANNES
Murdoch, 48, St. Annes Road West.
SOUTHAMPTON
Murdoch, 180, Above Bar.
SOUTHSEA
Murdoch, 92, Palmerston Road.
STOURBRIDGE
Murdoch, Town Hall Buildings, Market Street.
TUNBRIDGE WELLS
Murdoch, 46, High Street.
WOLVERHAMPTON
Murdoch, 63, Victoria Street.
YORK
Waddington & Sons, Ltd., Lendal.

at any of these showrooms

World Radio History

THE RADIO INDUSTRY

From an Economic Viewpoint

By D. A. BELL, M.A.

This survey of the part played by radio in the national economy is based, it should perhaps be stressed, on pre-war figures and estimates. Its potential importance is greatly increased by war-time advances; for instance, industrial applications of radio technique were insignificant in 1939. Actual post-war exports of broadcast receivers show, according to recent figures, a large increase over pre-war levels.

IT should be useful to those who intend to make a living out of radio to know how this industry fits into the general picture of the production of wealth in Britain. The collection of economic data is not as easy as a search of technical literature (at any rate to the amateur in economics) and the author therefore thought it worth while to put on record the composite picture built up from scraps of information gleaned over a period of years. Some of the figures quoted here will be exact figures (e.g., Government statistics of imports and exports), others will be previously published estimates, and the residue will have been estimated by the author from various data. All alike are stated here without qualification, but if any reader has evidence to support different values the author will gladly detail the basis of the relevant figures given here.

Size of Pre-War Radio Industry.—It may come as a shock to the radio enthusiast to see how small a contribution the radio industry made to the national economy before the war: and in fact the 1938 contribution was so small that it could not be illustrated graphically on a linear scale but only by comparing areas, as in diagram (*a*). (As we are familiar with megawatts and megavolts it is convenient to coin a new unit, the "megapound" with symbol £M, to represent a million pounds sterling.) The output of the radio industry in 1938 was £M25, compared with £M130 for all kinds of electrical engineering, and about £M4,500 for the total output of goods and services in the U.K. The position in the import/export balance (*b*) was similar, but by comparison with the average state of all branches of U.K. trade in 1938 the radio industry was doing well with a greater volume of exports than of imports. But neither the actual magnitude of exports nor the ratio of exports to home production in 1938 would suggest that the radio industry will become a key industry in the "export drive"; and this in spite of the fact that radio is manufactured only in the highly industrialized countries (such as U.S.A., Britain, Holland, Germany) and therefore has in the past been prominent in the world average of electrical engineering exports. In 1935, for example, radio equipment accounted for 25.3 per cent of world export trade in electrical engineering, but only 13.6 per cent of the corresponding British exports.

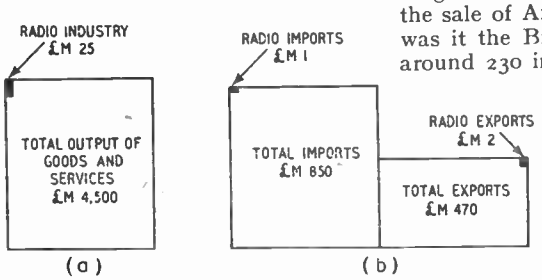

How radio fitted into the pre-war economic picture.

Import/Export Details.—With regard to the 1938 imports and exports (Table I), there are two surprising points. The first is that the value of *component parts of valves* imported was roughly the same as that of complete valves imported; and allowing for the increase in value of the assembled valves over the value of the parts, it is probable that twice as many valves were assembled from imported parts as were imported complete. In fact, it appears that there must have been a substantial valve-assembling industry, with an output of perhaps several million valves a year, which relied on imported electrodes. The other surprise is that the import of complete wireless receivers was so much less than that of parts and accessories. The import duties would have a deterrent effect on both alike, so was it the long-wave band which hindered the sale of American sets here, or was it the British mains voltages around 230 instead of the American 110? There is little doubt that taking each set in its home market the American set was considerably cheaper than the British set.

Production Costs.—This brings us to the question whether Britain should attempt to compete with America in mass-production industries, for there are engineers who suggest that British export trade should be based solely on our traditional craftsmanship and

TABLE I (1938).

Type of Product	Imports	Exports
	£	£
Wireless Receiving Sets	121,771	441,065
Wireless Valves (complete) ...	130,707	495,270
Wireless Valve Parts	124,206	—
Other wireless parts and accessories...	490,692	519,226
Radiograms, gramophone motors and parts	14,393	321,767
Total for receiving apparatus ...	881,769	1,777,328
Wireless transmitting apparatus...	34,525	339,558
Total for all wireless apparatus ...	916,294	2,116,886

World Radio History

The Radio Industry—
the production of high-quality goods, leaving the cheap mass-production lines of goods to the Americans or anyone else who cares to produce them. This suggestion can be countered as follows:—

(i) Mass-production is the way to lower the cost of consumer goods. In support of this, every impartial pre-war estimate arrived at the conclusion that the average standard of living, in terms of goods purchased, was higher (perhaps 50 per cent higher) in U.S.A. than in Britain.

(ii) With our present need for imports of food and raw materials and our shortage of foreign currency, we cannot afford to set off the import of semi-luxury goods such as radio receivers against whatever exports we may achieve in other branches of engineering. The choice for the home market is therefore between efficient mass-production of radio sets and high prices for less efficiently manufactured sets that are not necessarily better.

(iii) But if we can make sets cheaply for the home market, we can also export cheap sets.

It is important to realize that the set which is expensive simply because it is less efficiently manufactured is of no greater value to the user than a mass-produced set would be. There is a tendency to differentiate between "engineering" and "mass-production," to the detriment of the latter; but if we accept the definition of an engineer as a man who can do for 2s 6d what any fool can do for 5s, then surely the mass-production expert practises engineering *in excelsis*.

Wartime Expansion.—The war led to an inflation of both the British and American radio industries to something like six times their pre-war size, as illustrated by the following figures for Britain: from 1935 to 1945 the Government spent £M1,000 on radio (10^9 pounds); during the war, 5,000 men went through six-term university training courses for radio work; 70,000 men had four-month polytechnic training courses as radio mechanics. Within the general question of contraction of size from wartime condition to suit the probable volume of peacetime trade, the radio industry has some special problems:—

(i) There is a shortage of non-specialized labour, because of competition with other light industries in a time of general labour shortage, which together with shortage of materials tends to restrict the volume of production below the level set by probable average demand over, say, the next three years.

(ii) The broadcast receiver side of the industry is changing back to the comparatively simple domestic receivers which require smaller scientific and technical staffs than did the Government-contract work.

(iii) The policy of spreading secondary industry into parts of the country which in 1938 had only primary industries is one which affects the choice of factory location.

The general effect of these factors, coupled with the wartime training programme, is liable to be the production of a surplus of junior engineers, technicians and general "indirect labour" in the industry, which at the same time has a shortage of direct labour and an inadequate output.

Alternative Production.—Some contraction of the industry after the war was inevitable, but it has been proposed that to avoid temporary unemployment through wholesale closing down of factories the radio industry should have embarked on the manufacture of other articles. As a general proposition, this should be attractive to any firm which has sufficient capital to finance the new enterprises, and it might have the long-term advantage of combating the seasonal unemployment which used to occur in some purely radio factories as a result of the influence of the annual Radio Show on retail sales; typical alternative products are radar for civil transport (both marine and aircraft), electronic instruments for medical and for industrial use, and domestic electrical equipment. All of these are capable of occupying spare factories, but for combating seasonal unemployment the great difficulty is to find products which can be sent along the same assembly tracks and assembled by the same non-specialized labour as the broadcast receivers. The most promising line is domestic electrical equipment, but at the moment this appears impracticable owing to the shortage of porcelain insulators, which are very widely used in this type of product.

Electronic instruments are attractive to engineers, but the volume of work available is uncertain. The electronic scientific industry has not achieved recognition in Board of Trade statistics, either in the Census of Production (1935) or in the export statistics (up to 1945); and the number of firms seriously involved is so small that any unofficial estimate might appear to be directed at individual firms to an embarrassing degree. On general grounds of social welfare there is a case for greater development effort on both electro-medical equipment and electronic aids to industrial production; but this has no economic significance until someone can be persuaded to spend some money on it.

Future Policy.—The main purpose of this article is to present the facts from which policy can be built up, but the author cannot leave it without putting up an "Aunt Sally" or two on policy. The case for more efficient mass-production has already been mentioned, and the next obvious point is more efficient distribution from manufacturer to final purchaser. At the present time the retail price of a radio receiver is commonly around double the price at which it leaves the factory, and although this factor is common to many other articles besides radio sets, it is still unsatisfactory. One reason offered for having many retailers, each selling a small number of receivers at the present conventional price margins, is the need to have "service" immediately available when the set goes wrong; but is it not time that broadcast receivers were well enough engineered to make that unnecessary?

In the export market, standardization of components and especially of valves is essential. Let us here be realists and admit that the American standard will normally be the world standard by sheer weight of numbers: any

World Radio History

attempt to create a British standard which is not interchangeable with the American, and use this in the export market, is likely to be a Canute act. Coupled with standardization of components there is the question of a standard receiver for export, but apart from the psychological sales resistance to a "standard" receiver there is another danger in this suggestion. It is common knowledge that the Wartime Civilian Receiver was manufactured by a number of the regular radio firms to a standard design, and with the present organization of the radio industry there will always be a strong tendency for any communal manufacturing project to be shared out in this way. But such sharing out of production results in the quantities produced in individual factories being no greater than if each firm made its own type of receiver, and therefore destroys the whole advantage of a common design. A possible solution of this problem would be a greater division of the industry between component manufacture and receiver assembly: the main tooling costs would then be thrown on to the component manufacturers, who supply all receiver-manufacturing firms, and the efficiency of mass-production *assembly* does not depend so much on having exceptionally large quantities, provided that one has intelligent operators and skilled production organizers to direct their work.

To sum up, the economic need of the broadcast receiver industry at the present time is for more efficient organization of production rather than for an immediate large increase in the amount of scientific research.

RADIO ON THE ROYAL TRAIN

Equipment for Communication and Entertainment During the South African Tour

THE new coaches which have been built by the Metropolitan-Cammell Carriage and Wagon Company to the order of the South African Railways for addition to the royal train are liberally equipped with the products of the British radio industry.

First, there is a complete radio relay system, with about 60 loudspeakers unobtrusively installed in furniture and panelling, giving a choice at each point of two radio programmes. This equipment, which is used also for announcements, was supplied by E.M.I. Service, who were also responsible for the Type RR20 medium- and short-wave receiver installed in the King's study.

For gramophone entertainment the "Decola" wide-range electric record reproducer has been chosen, and six of these instruments with automatic record changers were supplied by the Decca Gramophone Company.

The complicated electrical equipment of the coaches, which includes automatically controlled air-conditioning plant, refrigerators, water pumps, fluorescent lighting, etc., has presented a formidable problem in noise-free radio reception. This has been entrusted to Belling and Lee, whose engineers have tracked down interference and applied the appropriate form of suppression as the work of installation has proceeded.

The co-ordination of the communications with the outside world has been undertaken by Marconi's Wireless Telegraph Company, who have supplied a high-speed telegraph and telephone transmitter (Type TGS571B) delivering up to 500 watts R.F. power to a roof aerial, or, when the train is stationary, to a temporary 30ft portable mast aerial. The operating coach, which is three coaches away from the transmitter, contains a Marconi Type CR150 communication receiver (and the broadcast receivers and amplifiers for the relay system). There are also duplicate Wheatstone transmitters and keyboard perforators for Press and other messages. Power is supplied by a 3kVA diesel-driven generator.

A pilot train will precede the royal train at a distance of about 10 miles, and a two-way radio telephone link has been provided between the trains for the use of the railway officials. The frequency-modulated V.H.F. equipment for this purpose has been supplied by the General Electric Company.

World Radio History

"MAGIC EYE" INDICATORS

Choice of Types for Use with Positive Feedback

By G. O. THACKER, B.Sc. and R. Y. WALKER, A.R.I.C.

DURING the course of constructing apparatus incorporating a "magic eye" tuning indicator with feedback (using a circuit similar to that described in *Wireless World*, May and June, 1944, by G. A. Hay) we discovered that there are in existence two distinct types of Mullard EM1 tuning indicators giving widely different results when used in this particular circuit.

Our first EM1 (hereafter referred to as the "War" EM1) had a domed top, no transverse cathode screen support wire, and round deflector rods giving a two-part field. The second EM1 (the genuine article) had a recessed top, transverse cathode screen support wire, and flat deflector vanes giving a four-part or Maltese cross field. The latter EM1 did all that your contributor claimed, i.e., we obtained a definite shadow shift for a 5 mV change of grid potential. With the "War" EM1 we were extremely fortunate if we could detect a shift for 20 mV. The basic circuit is shown in Fig. 1, and the visible differences between these two valves are illustrated in Fig. 2.

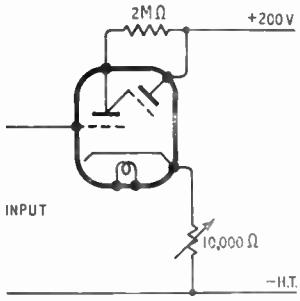

Fig. 1. "Magic Eye" circuit with cathode resistor giving positive feedback.

It is only fair to the manufacturers to say that both types had a complete shadow shift for 5 volts under ordinary operating conditions, i.e., no feedback—after all they were designed as tuning indicators!

With the co-operation of the Mullard Wireless Service Co. we were able to test an EM34 in the same chassis. This valve has two different shadows one of which is completely closed by 5 volts, and the second by 16 volts (and is a most ingenious means of indicating weak and strong signals). Unfortunately its behaviour as a sensitive bridge indicator was no better than the "War" EM1. It had a domed top and rod deflectors. By chance we came across another anomaly in the form of an EM4 (which is an EM34 with a side contact base) with a recessed top but no transverse cathode screen support, and having rod deflectors. This was, if anything, worse than the EM34.

It was evident that the lack of sensitivity of the War EM1 to very small changes in grid potential with positive feedback, was due to the structural alterations.

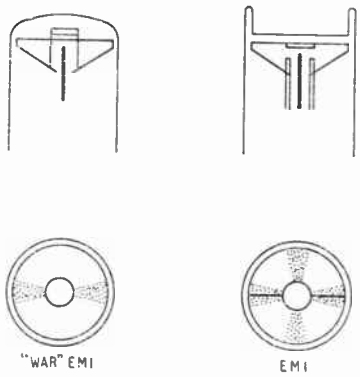

Fig. 2. Structural differences in the two versions of the EM1 tuning indicator.

In order to prove this point we sought an indicator with flat deflector vanes, the only one we could obtain being a Marconi Y63 which had a 22-volt grid base and an American type single part field.

The application of positive feedback was without noticeable effect even with a 150,000-ohm cathode resistor. However, by coupling the triode of either EM1 to the deflector system of the Y63, the grid of the latter being biased beyond cutoff as shown in Fig. 3, a sensitivity closely approaching the 5 mV of the EM1 was obtained. With the EM1 it was desirable to join the two targets together as shown dotted, but with the "War" EM1 this connection could be omitted. This was probably due to differences in the cathode currents of the two types.

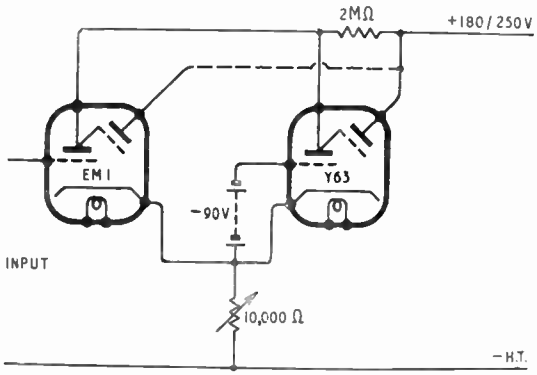

Fig. 3. Alternative circuit giving 5 mV sensitivity.

This arrangement (Fig. 3) was a great improvement over the "War" EM1, but was not quite equal to the genuine EM1, which the makers inform us they do not propose to manufacture again.

Possibly a 6E5 would fill the bill, but we have not yet found one.

To the obvious comment that a D.C. amplifier would give you all the sensitivity required we would point out that:—

(a) A higher total H.T. supply voltage is usually required.

(b) A relatively complicated

World Radio History

"Magic Eye" Indicators—

circuit is required with adjustable potentiometers, etc.

(c) Such a circuit tends to be less stable than a simple single-valve arrangement.

(d) The apparatus would be more bulky and expensive.

In conclusion, we take our hats off to G. A. Hay for producing such a simple and sensitive indicator circuit, which we can thoroughly recommend. To anyone interested we would add that the choice of a valve requires considerable care as it appears to us that extreme sensitivity will not be obtained unless it has a short grid base and *flat* deflector vanes.

WIRE BROADCASTING

A New Carrier-frequency Distribution System

A WIRED-WIRELESS broadcast relay system for the distribution of radio programmes has been in operation in Rugby for some time past on an experimental basis. The installation was planned and engineered by Multi-Broadcast (Engineering), Ltd., of Rugby, and provides four alternative programmes, using a single pair of overhead transmission wires. The installation has now been placed on a fully operational footing and a few details are available.

In a carefully chosen locality, where the electrical noise is sufficiently low, there has been erected a radio receiving station for reception of the B.B.C. and foreign programmes selected for re-broadcast. Separate aerials are used for each receiver and these are designed and sited to give the best reception in each case.

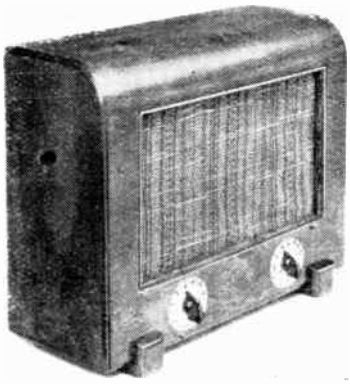

Multi-Broadcast subscriber's reproducer unit.

So far only four re-broadcast programmes are provided, but the installation is easily extended when the time arrives to take in the two additional ones planned.

Two of the present receivers are of the pre-tuned type, operating on 296 metres and 1,500 metres respectively; the other two are communication-type receivers covering a wide frequency range. A direct wire circuit to the B.B.C. studios at Birmingham is also available.

The A.F. outputs from the four radio receivers are amplified and then used to modulate the four carrier frequencies. These are then fed through a suitable matching network to the overhead 500-ohm feeder lines. The lines are air-spaced and carried on insulators affixed to the chimney stacks of the houses and dwellings taking the relay service.

All the carrier frequencies used are below 200 kc/s and a channel separation of about 20 kc/s is allowed. The low radio frequency, coupled with the relatively high signal level on the line, enables a comparatively simple receiver, described as a reproducer unit, to be used in the subscriber's home.

In appearance this is very similar to an extension loudspeaker, but has the addition of two controls. On the left-hand side below the loudspeaker grill is the six-way programme selector switch, while to the right of it is the volume control, with which is combined the on-off switch.

An A.C./D.C. circuit is employed having one carrier frequency amplifier, a push-pull detector, using Westectors, transformer coupled to a pentode output stage. The A.F. output available is about 3 watts.

BOOK RECEIVED

Reference Data for Radio Engineers (2nd Edition).—Compiled by W. L. McPherson, B.Sc., M.I.E.E., S.M.I.R.E. This book contains a very wide range of information valuable to radio engineers. It covers materials, rectifiers, amplifiers, propagation, aerials and waveguides among its data, which ranges from engineering tables to mathematical formulæ and tables. Originally prepared for the use of the staff of Standard Telephones and Cables, it is now generally available. Pp. 175. Published by Standard Telephones and Cables, Ltd., Connaught House, 63, Aldwych, London, W.C.2. Price 5s (postage 6d).

A 'SOUND' PROPOSITION!

ARE YOU A TANNOY STOCKIST?

A restricted number of qualified dealers and P.A. specialists are being appointed as approved stockists for the main trade distribution of Tannoy Sound Equipment.

Having declined to jeopardise the reputation of TANNOY by the introduction of Interim equipment to meet insistent demands for "anything at any price", the extensive post-war range of TANNOY Sound Equipment which is now becoming available, embodies all the latest technical developments in design and the highest quality of manufacture. The trade mark "TANNOY" remains a guarantee of reliability to you and your customer.

Write for the qualifications required of stockists and for complete details of the full range of TANNOY Equipment.

TANNOY
—SOUND EQUIPMENT—
GUY R. FOUNTAIN LTD.,
"THE SOUND PEOPLE"

"TANNOY" is the registered trade mark of equipment manufactured by
GUY R. FOUNTAIN LTD.,
WEST NORWOOD, S.E.27.
GIPSY HILL 1131.

The largest Organisation in Great Britain specialising SOLELY in Sound Equipment.

Branches throughout the British Isles.

World Radio History

SOCIETIES AND CLUBS

List of Radio Groups in the British Isles

IN the following list, arranged in alphabetical order under towns, the name of the club is followed by that of the secretary, from whom details of the society's activities may be obtained. Clubs which are affiliated to the Radio Society of Great Britain are indicated by an asterisk. The list has been compiled from details supplied by the secretaries and from other sources. We shall be pleased to receive details from the secretaries of active societies which have inadvertently been omitted from this list.

ABERDEEN

Aberdeen Amateur Radio Society.—A. G. Anderson, 87, Braemar Place, Aberdeen, Scotland.

ALTRINCHAM

Altrincham and District Radio Club.—J. G. Barnes, G3AOS, 4, Victoria Road, Hale, Cheshire.

BATH

Admiralty (Bath) Electronics Society*.—D. Houston, D.E.E. Dept., Admiralty, Bath, Som.

BELFAST

City of Belfast Y.M.C.A. Radio Club*.—F. A. Robb, GI6TK, 60 Victoria Avenue, Sydenham, Belfast, N. Ireland.

Radio Society of Northern Ireland*.—A. Kennedy, GI3KN, 38, Donaghadee Road, Bangor, Co. Down, N. Ireland.

BIRKENHEAD

Wirral Amateur Transmitting and Short-Wave Club.—B. O'Brien, G2AMV, 26, Coombe Road, Irby, Heswall, Cheshire.

BIRMINGHAM

Birmingham and District Short-Wave Society.—C. W. Thompson, 6, Caldwell Road, Birmingham, 9, Warwicks.

Midland Amateur Radio Society*.—W. J. Vincent, G4OI, The Grange, Warwick Road, Solihull, Birmingham, Warwicks.

Slade Radio.—L. A. Griffiths, Tresco, 34, Florence Road, Sutton Coldfield, Birmingham, Warwicks.

BLACKPOOL

Blackpool and Fylde Amateur Radio Society.—H. D. Ashworth, G4PY, 5, Albion Avenue, Blackpool, Lancs.

BOGNOR

West Sussex Short-Wave and Television Society.—L. Frost, G5PF, Pixies West Parade, Bognor, Sussex.

BOLTON

Bolton and District Radio Society.—N. Moorcroft, 3, Beaconsfield Street, Bolton, Lancs.

BOURNEMOUTH

Bournemouth and District Amateur Radio Club*.—J. F. Squires, M.B.E., G2DBF, 80, Victoria Road, Bournemouth, Hants.

BRADFORD

Bradford Amateur Radio Society*.—J. H. Macdonald, G4CJ, Mayfield, Waggon Lane, Bingley, Yorks.

Bradford Short-Wave Club*.—V. W. Sowen, G2BYC, Rushwood, Grange Park Drive, Cottingley, Yorks.

BURTON-ON-TRENT

Burton-on-Trent and District Radio Society.—S. E. Whiteley, G2DAN, "Dalbrae," Beacon Hill, Rolleston, nr. Burton-on-Trent, Staffs.

CAMBRIDGE

Cambridge University Wireless Society*.—K. E. Machin, Queen's College, Cambridge.

CHATHAM

Medway Amateur Transmitters' Society.—S. J. Coombe, Stanvic, Longhill Road, Chatham, Kent.

CHELTENHAM

Cheltenham and District Amateur Radio Society.—H. Brislin, 52, Cleevemount Road, Cheltenham, Glos.

COVENTRY

Coventry Amateur Radio Society*.—J. W. Swinnerton, G2VS, 118, Moor Street, Coventry, Warwicks.

CRANWELL

Royal Air Force Amateur Radio Society*.—N. Davis, R.A.F., Cranwell, Lincs.

DONCASTER

Doncaster and District Amateur Radio Society*.—H. Flintham, 50, Burton Avenue, Balby, Doncaster, Yorks.

DUBLIN

Practical Amateur Radio Constructors' Club.—T. Keogh, 8, New Ireland Road, Rialto, Dublin, Eire.

DUMFRIES

Dumfries and Galloway Amateur Radio Society.—D. F. Halliday, GM2AHD, Cresswell House, Dumfries, Scotland.

EAST GRINSTEAD

East Grinstead Radio and Television Society.—E. C. Cooper, Heatherlea, Cranston Road, East Grinstead, Sussex.

FARNBOROUGH

R.A.E. and Farnborough District Radio Society.—P. R. Burkett, G4PS, Park View, Priory Street, Farnborough, Hants.

GLASGOW

Hi-Q Club, Giffnock*.—J. D. Gillies, GM2FZT, 3, Berridale Avenue, Glasgow S.4, Lanark.

GLOUCESTER

Gloucester and District Amateur Radio Society.—J. W. Dean, G2AZT, 100, Stanley Road, Gloucester.

GRAYS

Grays and District Amateur Radio Club*.—E. F. Read, 26, Hillside, Little Thurrock, Grays, Essex.

GRIMSBY

Grimsby Amateur Radio Society.—S. Stocks, G8KH, 60, Tunnard Street, Grimsby, Lincs.

HALIFAX

Halifax Experimental Radio Society.—L. Blagbrough, 39, Fountain Street, Sowerby Bridge, Yorks.

JERSEY

Jersey Radio Society.—L. Banks, GC2CNC, Fort Rock, Tabor Lane, Ronte de Genets, St. Brelade, Jersey, C.I.

KETTERING

Kettering Radio and Photographic Society*.—I. L. Holmes, Miami, The Close, Headlands, Kettering, Northants.

LEEDS

Leeds Radio and Television Society.—F. Stork, 1, Brudenell View, Leeds, 6, Yorks.

Benton Radio Club*.—D. Freeman, Deriston, Harrowgate Road, Rawdon, nr. Leeds, Yorks.

LEICESTER

Leicester Radio Society.—Owen D. Knight, 16, Berners Street, Leicester.

LIVERPOOL

Liverpool and District Short-Wave Club.—T. W. Carney, G4QC, 9, Gladeville Road, Aigburth, Liverpool, 17, Lancs.

LONDON AND DISTRICT

Edgware and District Radio Society*.—R. H. Newland, G3VW, 3, Albany Court, Montrose Avenue, Edgware, Middlesex.

Grafton Radio Society.—W. H. C. Jennings, G2AHB, 82, Craven Park Road, N.15.

Hounslow and District Radio Society*.—A. H. Pottle, B.Sc., 11, Abinger Gardens, Isleworth, Middlesex.

Ilford and District Radio Society.—C. E. Largen, 44, Trelawney Road, Barkingside, Ilford, Essex.

Islington Radio Club.—G. E. Lazell, 49, Hungerford Road, Islington, N.7.

Kingston and District Amateur Radio Society.—J. Hughes, 12, Hillingdon Avenue, Ashford, Middlesex.

North West Kent Amateur Radio Society.—L. Gregory, G2AVI, 18, Upper Park Road, Bromley, Kent.

Radio Society of Harrow.—J. F. A. Lavender, G2KA, 29, Crofts Road, Harrow, Middlesex.

St. Pancras Radio Society*.—H. Brown, 84, Blenheim Gardens, N.W.2.

Surrey Radio Contact Club*.—L. C. B. Blanchard, 122, St. Andrew's Road, Coulsdon, Surrey.

Thames Valley Amateur Radio Transmitting Society*.—D. R. Spearing, G3JG, Thurston, Orchard Way, Esher, Surrey.

Wanstead and Woodford Radio Society.—F. C. Judd, G2BCX, 111, Maybank Road, South Woodford, E.18.

Watford and District Radio and Television Society*.—J. C. Warren, 29, Market Street, Watford, Herts.

West Middlesex Amateur Radio Club*.—N.S.C. Priest, 7, Grange Road, Hayes End, Middlesex.

LONDONDERRY

North-West Ireland Amateur Radio Society.—D. R. J. Adair, Cosy Lodge, Culmore Road, Londonderry, N. Ireland.

LOUGHBOROUGH

Beaumanor Amateur Radio Society.—E. Pethers, Beaumanor Park, Loughborough, Leicester.

MAIDENHEAD

Maidenhead Amateur Radio Club*.—R. F. Woodruff, Oaklands, College Road, Maidenhead, Berks.

MAIDSTONE

Maidstone Amateur Radio Society*.—T. D. Eaves, Ashmore, Ashford Road, Maidstone, Kent.

MALVERN

T. R. E. Amateur Radio Society*.—B. H. Briggs, House 5, T.R.E., Great Malvern, Worcs.

MANCHESTER

Whitefield and District Radio Society.—E. Fearn, 4, Partington Street, Newton Heath, Manchester, 10, Lancs.

MIDDLESBROUGH

South Bank and District Amateur Radio Society.—H. Stubbings, 11, Station Road, South Bank, Middlesbrough, Yorks.

NEATH

Neath, Port Talbot and District Short-Wave Club.—S. Roberts, GW4NZ, 26, Chestnut Road, Cimla, Neath, Glam.

NEWCASTLE

Northern Radio Club*.—A. Robson, 522, Denton Road, Newcastle-on-Tyne, 5, Northumb.

OSWESTRY

Oswestry and District Radio Society.—A. D. Narraway, Lamorna, Pant, nr. Oswestry, Salop.

OXFORD

Oxford and District Amateur Radio Society.—R. H. Farmery, 99, Stanway Road, Headington, Oxford.

World Radio History

Societies and Clubs—

PENZANCE

West Cornwall Radio Club*.—R. V. A. Allbright, G2JL, Greenacre, Lidden, Penzance, Cornwall.

PORTSMOUTH

South Hants Radio Transmitting Society*.—J. S. K. Stephens, G8WC, 65, Ebery Grove, Copnor, Portsmouth, Hants.

PRESTON

Preston Radio Society*.—J. Hamilton, 48, Queen's Road, Preston, Lancs.

READING

Reading and District Amateur Radio Society*.—L. A. Hensford, B.E.M., G2BHS, 30, Boston Avenue, Reading, Berks.

ROMFORD

Romford and District Amateur Radio Society*.—R. C. E. Beardow, G3FT, 3, Geneva Gardens, Whalebone Lane North, Chadwell Heath, Essex.

ST. HELENS

St. Helens and District Radio Society.—J. K. Birch, G2FOS, 19, Knowsley Road, Rainhill, St. Helens, Lancs.

SALISBURY

Salisbury and District Short-Wave Club.—C. A. Harley, 85, Fisherton Street, Salisbury, Wilts.

SHEERNESS

Sheppey Amateur Radio Club.—F. G. Maynard, G4OU, 160, Invicta Road, Sheerness, Kent.

SOUTH SHIELDS

South Shields Amateur Radio Club.—W. Dennell, 12, South Frederick Street, South Shields, Northumb.

South Shields Short-Wave Radio Club.—J. J. Monaghan, G5SB, 60, Lemon Street, Tyne Dock, South Shields, Northumb.

SOUTHAMPTON

Southampton Radio Club.—A. Ward, 50, Onibury Road, Bitterne, Southampton, Hants.

SOUTHEND

Southend and District Radio and Scientific Society*.—K. F. Crispin, G6MH, 21, Thurston Avenue, Southend-on-Sea, Essex.

SOUTHPORT

Southport Amateur Transmitters' Association.—J. R. Fennessy, G5ZI, 65, Balmoral Drive, Southport, Lancs.

STOCKPORT

Stockport Amateur Short-Wave Radio Society*.—L. Chappell, G2AAY, Heathfield, Buxton Road, Disley, Cheshire.

STOKE-ON-TRENT

Stoke-on-Trent and District Amateur Radio Society.—D. Poole, 13, Oldfield Avenue, Norton-le-Moors, Staffs.

Cheadle and District Amateur Radio Society.—V. E. Hughes, G3AVG, Abbots-Haye, Cheadle, Stoke-on-Trent, Staffs.

STOURBRIDGE

Stourbridge and District Radio Society.—D. Rock, G8PR, Flat 1, Block 1, Summerfield, Kidderminster, Worcs.

SUNDERLAND

Sunderland and District Amateur Radio Club.—W. Stockburn, G2TG, 40, Netherburn Road, Sunderland, Durham.

SWINDON

Swindon and District Short-Wave Society.—P. Greenwood, G2BUJ, 49, Western Street, Swindon, Wilts.

TIVERTON

Blundell's School Radio Club*.—Tiverton, Devon.

WARRINGTON

Warrington and District Radio Society.—S. Allen, 25, Bruche Drive, Padgate, Lancs.

WIGAN

Wigan and District Amateur Radio Club.—H. King, 2, Derby Street, Wigan, Lancs.

WELLINGTON

Wrekin Amateur Radio Society.—T. L. Stevens, G3XV, Sunny Cottage, Donnington Wood, Wellington, Salop.

WEST BROMWICH

West Bromwich and District Radio Society*.—R. G. Cousens, 38, Collins Road, Wednesbury, Staffs.

WEST HARTLEPOOL

West Hartlepool and District Radio Club.—A. R. Donald, G3TO, 18, Stockton Road, W. Hartlepool, Durham.

WOLVERHAMPTON

Wolverhampton Amateur Radio Society.—W. O. Sturmey, G8KL, 3, Broome Road, Wolverhampton, Staffs.

YEOVIL

Yeovil Amateur Radio Club.—D. Hover, 57, Everton Road, Yeovil, Som.

YORK

York and District Short-Wave Club.—G. Kelley, G5KC, 146, Melrosegate, York.

Books issued in conjunction with "Wireless World"

	Net Price	Post-age
FOUNDATIONS OF WIRELESS. Fourth revised Edition, by M. G. Scroggie, B.Sc., A.M.I.E.E.	7/6	(4d.)
TELEVISION RECEIVING EQUIPMENT, by W. T. Cocking, M.I.E.E., 2nd edition in preparation	12/6	(4d.)
RADIO LABORATORY HANDBOOK, by M. G. Scroggie, B.Sc., A.M.I.E.E., 3rd Edition	12/6	(5d.)
WIRELESS SERVICING MANUAL, by W. T. Cocking, M.I.E.E., Seventh Edition	10/6	(4d.)
HANDBOOK OF TECHNICAL INSTRUCTION FOR WIRELESS TELEGRAPHISTS, by H. M. Dowsett, M.I.E.E., F.Inst.P., and L. E. Q. Walker, A.R.C.S., Eighth Edition	30/-	(7d.)
BASIC MATHEMATICS FOR RADIO STUDENTS, by F. M. Colebrook, B.Sc., D.I.C., A.C.G.I.	10/6	(5d.)
RADIO DATA CHARTS. Fourth Edition, Revised by J. McG. Sowerby, B.A., Grad. I.E.E.	7/6	(4d.)
LEARNING MORSE. 335th thousand	6d.	(1½d.)
RADIO WAVES AND THE IONOSPHERE, by T. W. Bennington	6/-	(3d.)

Obtainable from booksellers everywhere or direct (cash with order) from the publishers

ILIFFE & SONS LTD., Dorset House, Stamford Street, London, S.E.1

PREMIER RADIO

MORRIS & CO. (RADIO) LTD.

ALL POST ORDERS TO:

JUBILEE WORKS, 167 LOWER CLAPTON RD., LONDON, E.5 (Amherst 4723)

CALLERS TO:

169 FLEET STREET, E.C.4 (Central 2833)

OUR 1946 LIST IS NOW AVAILABLE
All enquiries must be accompanied by a 2½d. stamp.

MIDGET RADIO KIT. Build your own Midget Radio. A complete set of parts, including valves, loudspeaker and instructions. In fact, everything except cabinet necessary to build 4-valve Medium and Long Wave T.R.F. Radio operating on 200-250 v. Mains, A/C or D/C. Valve line-up, 6K7, 6J7, 25A6, 25Y5. Wavelengths covered 200-557 and 700-2,000. Size 10 × 6 × 6in. Completely drilled chassis. Price, including tax, **£6 17s. 6d.**

An attractive bakelite cabinet can be supplied at 25/- extra.

SUPERHET MIDGET RADIO KIT. A complete kit of parts for a 5-valve superhet. Covers 16-50 and 200-557 metres. AC/DC 200-250 v. 6K8, 6K7, 6J7, 25A6, 25Y5. Size 10 × 6 × 6in. Completely drilled chassis. Price, including tax, **£8 5s.**

An attractive bakelite cabinet can be supplied at 25/- extra.

COLLARO PORTABLE RECORD PLAYERS. Consist of a super quality induction type gramophone motor 200-250 v. A/C with autostop and high-grade magnetic pickup. Mounted in a leatherette carrying case. Price **£11 5s.** A few only. Delivery from stock.

OUTPUT TRANSFORMERS. A super production. By means of ingenious series-parallel arrangements, all windings are used at all times. Match any tube, single or push-pull to any voice coil 2-30 ohms. 7 watts, 22/6; 15 watt, 30/-; 30 watt, 49/6; 60 watt, 59/6.

ALUMINIUM CHASSIS. Substantially made of bright aluminium, with four sides.

7 × 3½ × 2in.	4/6	9½ × 4½ × 2in.	5/6
10 × 8 × 2½in.	7/-	10 × 9 × 2½in.	7/9
14 × 9 × 2½in.	8/3	16 × 8 × 2½in.	8/6
20 × 8 × 2½in.	10/6	22 × 10 × 2½in.	13/6

2-VALVE SHORT-WAVE BATTERY KIT. A complete kit of parts for a 2-valve receiver, covering 15-600 metres, including valves, coils, drilled chassis, H.T. and L.T. dry batteries to last approximately 6 to 12 months. A pair of double headphones and full instructions. Price **£5 10s.** An extra coil can be supplied, covering 600-1,900 metres at 4/-.

B.F.L. SIGNAL GENERATOR. 100 kc/s to 30 mc/s. Mains operated. **£21.*** Send for descriptive leaflet.

MOVING IRON METERS. Flush mounting, 2in. diameter, available for D/C only in the following ranges: 10, 25, 50, 100, 250 and 500 m/a, 1, 2, 3, 5 and 10 amps., 10/6 each.

FERRANTI MOVING COIL METERS. 2½in. diameter flush mounting, calibrated 0-500 microamps. 21/-.

5-WATT AC/DC AMPLIFIER. For use as gramophone pick-up amplifier. Push/pull, excellent quality. **£8 8s.**

BATTERY CHARGER KITS. All incorporate metal rectifiers, input 200-250 v. AC. 40/100 cycles.

	Price
To charge 2 v. accumulator at ½ amp.	15/-
To charge 6 v. accumulator at 1 amp.	17/6
To charge 12 v. accumulator at 1 amp.	22/6
To charge 6 or 12 v. accumulator at 4 amps. Complete with variable resistance and meter	£3/15/-
To charge 6 or 12 v. accumulator at 6 amps. ditto	£5/-/-

MAINSBRIDGE TYPE CONDENSERS. Huge purchase of Military Surplus Paper Condensers. Super quality, oil filled.

Capacity	Working Voltage	Size H	Price Each	Per Doz.
2 mf.	1,000	4¾ × 1¾ × 1	2 6	20/-
2 mf.	600	3¾ × 1¾ × 1	1 3	10/-
1 mf.	600	2¾ × 1¾ × 1	1 -	8/-

KIT OF PARTS FOR H.T. ELIMINATOR AND TRICKLE CHARGER. Output 150 v. 30 m/a 2 v. half amp. Metal Rectification. Amazing value, at 30/-.

RADIOGRAM CABINETS. Excellent appearance and workmanship. Size 34½in. high, 19in. deep, 36in. wide, light mahogany finish. Cabinet only **£26.** With motor and pickup, **£32 16s.**

World Radio History

UNBIASED

By FREE GRID

Radarecording

JUDGING by the things one reads in the newspapers nowadays most people don't seem to have much faith in the future of civilization. It appears that we have either got to face the perpetual menace of the atom bomb or put up with a lot of prying international customs officers poking about among the silk stockings and wrist watches in our

"Poking in our suitcases."

suitcases when we return from a Continental holiday in order to see that we have no hidden hoards of uranium.

I did think, however, that readers of *Wireless World* would be a little above all this jitterbug business. I was all the more surprised to learn from one of them, who has been a faithful follower of this journal's fortunes for the better part of forty years, that he is so convinced that the days of our present civilization are numbered he is taking active steps to put on record the history of our times. His intention is to preserve it for generations countless centuries hence when a new civilization has arisen to whom Hiroshima will have no more significance than has Ur of the Chaldees to the average man of to-day.

As he rightly pointed out to me, it is quite useless burying copies of our leading newspapers and suchlike things as, for instance, were placed under Cleopatra's Needle when it was erected on the Embankment by our Victorian forefathers. It is obvious such records will either be blasted away by atom bombs in future wars or destroyed by the Government of the totalitarian one-state world which some people seem to envisage as our only hope of avoiding future conflicts.

The recordings, therefore, must be made and hidden in such a manner that they will be utterly beyond the power of either atom bombs or a neo-Hitler to destroy and yet be readily accessible to future generations. There is only one recording medium which fulfilled these conditions, said my friend, and that is radio. His idea is to broadcast accounts of contemporary history on a wavelength sufficiently short for it to penetrate the various ionized layers as do the still shorter wavelengths that bring the sun's light and heat to us.

These broadcasts will eventually reach the stars, and by normal radar reflection, come bouncing back over and over again throughout the centuries as star after star is reached so that they will be permanently on tap for future generations after the passing of the threatened intellectual ice age when civilization will be in eclipse as it was after the destruction of the Babylonian and other ancient civilizations.

The only real difficulty to my mind is to design a receiver sufficiently sensitive to discount the tremendous spatial attenuation and yet give a good signal/noise ratio —but that is a problem for our remote descendants. We shall have our hands quite full enough, designing a layer-piercing U.S.W. transmitter.

Mozart Mangled

AS one who has always been a believer in what Carlyle described as the "Oneness of Beauty," it surprised me in pre-war years to see the utter lack of imagination displayed by certain receiver manufacturers, most of whom used to make a point of stressing, among other virtues, the reproduction qualities of their particular products. Yet, almost without exception, the instrument was housed in an ugly brown box which, by the offence it gave to the eye, more than offset any beauty which it conveyed to the ear.

In fact I felt so strongly about it that I made it an invariable custom to have the blinds drawn or the lights out, according to the time of day, and listen in complete darkness at home. I finally had to abandon this course after very strong representations from Mrs. Free Grid concerning its effect on the behaviour of some of the adolescent Grid Leaks who seemed to regard it as a heaven-sent opportunity to bring in their friends of the opposite sex and indulge in an orgy of osculation.

Worst of all offenders in the matter of the "Oneness of Beauty" business were the "super-quality" merchants, some of whom expected me in all seriousness to clutter up my home with monstrous baffles or gargantuan horns suspended from the ceiling. The truth of the matter is, of course, that no real thought has ever been given to the question of harmonizing beauty of sight with beauty of sound. Now we are fast approaching the days of normality, when once again the word "queue" will be associated in our minds only with the Manchu dynasty, set manufacturers will certainly have to do something about it if they are to continue to keep the wolf from the door, and I don't mind giving them a hint which will bring a lot of grist to their mills.

I contend that the style of cabinet which will convey to the eye the same sense of restful beauty which the music of Mozart brings to the ear will be utterly unsuitable for the restless turmoil of an Itma programme. One cannot enjoy a choice vintage wine if it is served up in a cocoa mug, and, what is equally important, *vice versa*. In other words, different types of programme call for different styles of cabinet and, since, in effect, different cabinets mean different receivers, the plan obviously opens the way to the sale of at least six sets to every family.

At the moment, of course, beauty lovers, who possess a more disciplined family than I do, can switch off the lights and so save Mr. Shinwell the trouble of doing it for them.

"Strong representations from Mrs. Free Grid."

World Radio History

RANDOM RADIATIONS

By "DIALLIST"

Reproduction Problems

IT was a little surprising to find the music critic of *The Times* writing the other day that he preferred the reproduction of the mechanical gramophone to that of an electrical instrument "with its hissing treble and booming bass." No electrical instrument can, of course, provide perfect reproduction, for the simple reason that it can't bring out what isn't on the record; but a really well-designed electric gramophone is surely a vastly better performer than any purely mechanical instrument. There should not be any boominess in the bass—though it must be admitted that far too many instruments display this revolting quality. The hiss alluded to is, I imagine, that due to surface scratch, and there are ways, though not completely satisfactory ones, of dealing with that. But where, to my mind, the high-class electrical reproducer can be outstanding is in the matter of contrast expansion, or contrast restoration, as I prefer to call it. This, again, is not perfect; but it can be exceedingly good and it does add enormously to the pleasure obtainable from the playing of almost any good orchestral record. One feels that if the critic were to hear a record of his choice reproduced first by the best of mechanical gramophones and then by a first-rate electric gramophone with automatic contrast restoration, he might become a convert to electrical methods.

□ □ □

"Carbon Tet."

DO you know the virtues of carbon tetra-chloride in the radio lab and workshop? It is one of the very best of all cleaners of moving electrical contacts. During the war every radar cabin was provided with a fire extinguisher charged with carbon tet. One of the first things I used to look at when I was inspecting was this extinguisher—and the odds were that it was empty. The reason why? Well, the A.T.S. knew that carbon tet. was admirable for removing grease spots from their uniforms, and the radio mechs knew equally well that it was just what the doctor ordered for dealing with moving contacts which had become noisy and "chancy." If you are not familiar with its action (which can produce miracles of healing at times) I can wholeheartedly recommend you to try it next time you have a scratchy volume control, a jumpy potentiometer, or a temperamental wave-change switch. Defects of these kinds often develop as the result of an invisible coating of grease or dirt at the contact points. Carbon tet. removes both with the greatest of ease. Apply a little with a fine, clean paintbrush to the track of a volume-control contact arm, twiddle the knob rapidly to and fro a few times and you may be surprised at the improvement. In the G.L. Mark II radar receiver there was a motor-driven switch, running at about 1,400 r.p.m., whose job in every revolution was (a) to deliver the output of the bearing aerial array in phase with that of the range aerial, (b) to do the same with the output of the elevation array, (c) to deliver the bearing output out of phase with that of the range aerial, and (d) to do likewise with that of the elevation array. You might have thought that with signal frequencies of the order of 55-84 Mc/s a mechanical switch would have given trouble. Actually, it seldom did so, provided that it was kept clean—and carbon tet. was the answer to that one.

□ □ □

Records of the Future

IT is hardly to be imagined that we shall continue to be content indefinitely with the wax gramophone record, with its contrast compression, its limited frequency range, its needle scratch and its continual deterioration through the wearing away of its surface by the needle. The fact that we haven't got away from the wax record already is due simply to the millions of gramophones, mechanical or electric, and the vast numbers of records owned by men and women the world over. To change over to magnetophon tape or sound track film would be a complicated and expensive business. It would probably be a long time before the new recordings could be made to pay their way and for years both wax and metal or celluloid records would have to be made side by side. Nevertheless, the change is bound to be made in time. My own forecast is that the magnetophon, or a development of this principle, will eventually win the day and that the records of the future will be made on metal-coated plastic tape. And what a boon

Vortexion

SUPER 50-WATT AMPLIFIER

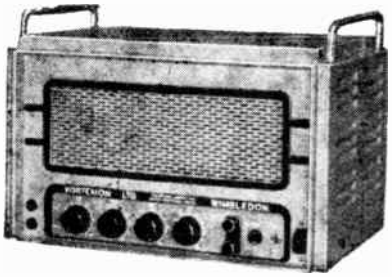

30 cps. to 25,000 cps. within ¼ db. under 2% distortion at 40 watts and 1% at 15 watts, including noise and distortion of pre-amplifier and microphone transformer. Electronic mixing for microphone and gramophone of either high or low impedance, with top and bass controls. Output for 15-240 ohms, with generous voice coil feedback to minimise speaker distortion. New style easy access steel case gives recessed controls, making transport safe and easy. Exceedingly well ventilated for long life. Amplifier complete in steel case, as illustrated, with built-in 15 ohms mu-metal shielded microphone transformer, tropical finish. Price 36½gns.

C.P. 20A 15 Watt AMPLIFIER for 12-volt battery and A.C. mains operation. This improved version has switch change-over from A.C. to D.C. and "stand-by" positions, and only consumes 5½ amperes from 12-volt battery. Fitted mu-metal shielded microphone transformer for 15-ohm microphone, and provision for crystal and moving iron pick-up with tone control for bass and top and outputs for 7.5 and 15 ohms. Complete in steel case, with valves. £28 0 0.

A.C.20 AMPLIFIER.—This well-known model has been retained and has a response 30—15,000 cps., mixing arranged for crystal pick-up and microphone, large output transformer for 4—7.5 and 15 ohms to deliver 15 watt at less than 5 per cent. total harmonic distortion to the speakers ..... Price £21 0 0. Case for above model, Price £3 6 0.

RECORD REPRODUCER.—This is a development of the A.C.20 amplifier with special attention to low noise level, good response (30—18,000 cps.) and low harmonic distortion (1 per cent. at 10 watts). Suitable for any type of pick-up with switch for record compensation, double negative feedback circuit to minimise distortion generated by speaker. Has fitted plug to supply 6.3 v. 3 amp. L.T. and 300 v. 30 M.a. H.T. to a mixer or feeder unit ..... Price £21 0 0. Case for above model, Price £3 6 0.

Dealers and Export Agents should write for special terms to :—

VORTEXION LTD.

257-261, THE BROADWAY, WIMBLEDON, LONDON, S.W.19

Telephones: LIBerty 2814 and 6242/3.
Telegrams: "VORTEXION, WIMBLE., LONDON."

World Radio History

Random Radiations—

they will be! Their frequency range will be wide enough to satisfy the most critical ear; there will be no scratch or other surface noises; no matter how often they are played the quality of their reproduction won't deteriorate; they will make it possible to play through a whole opera without interruption.

□ □ □

Radar or Radiolocation

As "Cathode Ray" says, I am beginning to weaken (if, indeed, I haven't thrown up the sponge altogether) in my championship of "radiolocation" in preference to "radar" as the name of the new war-born offspring of electronics. At one time it did seem that the longer name was the better, as being the more descriptive. Well, one must move with the times. No doubt there were half a century ago well-meaning folk who strenuously opposed the then new word "bicycle" on the grounds that (a) "velocipede" said what it meant —a contrivance which enabled you to attain speed by working with your feet, (b) that "bicycle," meaning nothing more than "two-wheeled," could apply equally well to a gig or a hand-cart and (c) that there was no need to drag in Greek when honest Latin would do! Like Mr. Jorrocks's foxes I cry "capevi." Radar it shall be henceforward.

V55R COMMUNICATION RECEIVER

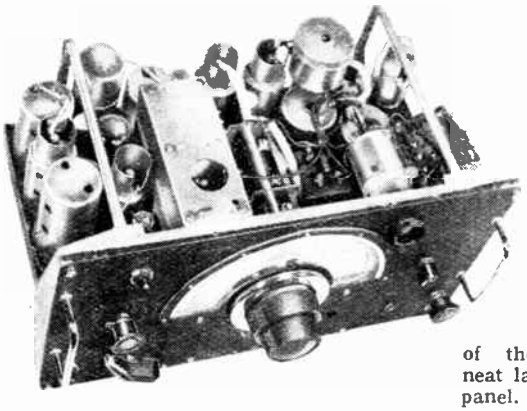

Commercial Modification of an Ex-R.A.F. Set

Radiovision V55R receiver removed from its case. The mains transformer and rectifier are visible on the extreme right of the chassis. Note the neat layout of the new front panel.

Basically this is the R.A.F. type R1155 receiver very considerably modified and fitted with a new front panel and enclosed in a redesigned case. Both are black crackle finished thus preserving something of the original appearance.

Of the many controls fitted to the R1155 only five are retained in their original rôles, these being the tuning control, waveband switch, volume control, B.F.O. on-off and heterodyne adjustment.

New controls added comprise a mains on-off switch, tone control and send-receive switch; this merely cuts the H.T. supply. There is also a telephone jack, which is in the secondary circuit of the output transformer.

By removing the two D.F. switching oscillator valves (VR99), master switch and all associated components, also the three plugs and wiring, space has been made on the right-hand side of the chassis for a mains transformer and rectifier above deck and for a smoothing choke and a pair of electrolytic condensers underneath the chassis.

The valveholder on the left of the B.F.O. box, which originally held the VR102 double triode, has been rewired for a KT63 and its output transformer is accommodated immediately behind the tuning dial below the chassis. The ratio is chosen to suit a 3-ohm loudspeaker.

Removal of the master switch in its entirety and rewiring so that A.V.C. is always operative has converted a somewhat complicated system of alternative gain controls into an A.F. control only.

Apart from clearing away some redundant R.F. chokes in the aerial input leads, the R.F. and I.F. circuits remain unchanged. There is no occasion for modification here so that the true sensitivity and selectivity of the receiver is virtually that of the original. And this is quite adequate for all the requirements of a communications receiver.

Matching the receiver in height and back to front dimensions, also in finish, is a complementary unit containing a 5- and 10-metre converter. It includes an R.F. stage fitted with an EF50 valve, and one of the same type is used also in the mixer position. There is a separate oscillator valve, also a built-in power supply. Ceramic waveband switches are employed.

Housed in a similar case is a loudspeaker, and the three units together form a most imposing receiving installation, covering all but the longest amateur waveband in general use.

The price of the Radiovision V55R receiver is now £29 10s; the frequency expander is priced at £18 2s 10d inclusive, and a matched moving coil loudspeaker costs £2 14s 6d.

This equipment is obtainable from Radiovision (Leicester), Ltd., 58-60, Rutland Street, Leicester.

BOOK REVIEWS

The Gas-Filled Triode. By G. Windred, A.M.I.E.E. Pp. 72, with 40 diagrams. Hulton Press, Ltd., 43, Shoe Lane, London, E.C.4. Price 2s 6d.

This is the fourth of a series of monographs published in connection with *Electronic Engineering*, to "enable radio engineers and students to acquire at reasonable cost information which could only be otherwise obtained from a number of books and periodicals." This intention it undoubtedly fulfils.

"Triode" in the title should not be taken too literally, for the book also describes in some detail and discusses the advantages and applications of gas-filled tetrodes. Its scope can be judged from the chapter headings—General Principles, Construction and Physical Properties, Load Ratings and Characteristics, Methods of Control, Cathode Protection, Methods of Testing, and General Applications.

The treatment is simple and practical, and quite an elementary knowledge of valves and electrical circuit technique is sufficient background. The author obviously bears in mind that gas-filled tubes are likely to be used in a great variety of applications requiring

World Radio History

continuous reliable operation, with a minimum of specialist attention; and he therefore stresses the conditions necessary to success in these respects. The chapter on testing, too, is chiefly to assist users to check that the proposed tubes are adequate for the working conditions, or *vice versa*.

The final chapter comprises a representative selection of applications, illustrating the very varied duties these tubes can perform. Summarized data on 15 types are given in tabular form, plus two others in the text (in repeating the data on one of these, one of the few misprints — "μF" for "pF" — occurs).

A table of contents and/or index would have been helpful, but even as it is the book is good value and can be heartily recommended.

M. G. S.

Plastics for Electrical and Radio Engineers. By W. J. Tucker and R. S. Roberts. Pp. 148+xi. The Technical Press, Ltd., "Piccancot," Gloucester Road, Kingston Hill, Surrey. Price 12s.

THIS is an excellent example of a technical data book on a complex subject, the presentation of which is acceptable and accurate in matters of fact. It can be recommended as a practical reference book to designers, engineers and students whose work necessitates essential data for applications in the electrical and radio fields.

The chemical, mechanical and electrical properties of the various plastic materials are discussed. A valuable section explains terms and definitions, while the many substances to which trade names have been given are classified with their essential data. Detailed and practical guidance on the application of plastics to various purposes is given in later chapters.

In dealing with the chemistry of plastics, it is felt that the authors would have been well advised to link the plastics with materials with which they will be associated under service conditions; particularly with liquid dielectrics and metals.

The tables in the "Materials Available" chapter provide an excellent survey of the field, and form a valuable guide to the choice of materials at the design stage. Synthetic rubbers, silicones, and melamine plastics are among the substances dealt with, but the treatment of silicones merits expansion.

On the choice of materials, information is given from both the electrical and mechanical points of view, and it is presented in such a way that the designer can quickly decide on the generic class of plastic for a specific purpose.

G. W. I.

Getting a Quart

OUT OF A PINT POT

Despite every effort on our part to maintain a steady output of high-grade components and, what is more important, to deliver the goods, we find materials and labour inadequate to meet with your demands. It is the old story of trying to do the impossible.

We therefore tell you of our difficulties so that you will have patience and understanding. For the future two things are certain. First, you may expect a slow but steady increase in deliveries of Bulgin Components. Second, you will find that every Bulgin product conforms to the precision standards we have maintained for a quarter of a century.

BULGIN
(REGD. TRADE MARK)

Famous Since Broadcasting Began

A. F. BULGIN & CO., LTD.

BYE PASS ROAD - BARKING - ESSEX

RIPpleway 3474 (5 lines)

World Radio History

RECENT INVENTIONS

A Selection of the More Interesting Radio Developments

RADIATING SYSTEMS

ULTRA-SHORT waves are radiated from an aerial which is located completely below ground level. As shown in cross-section, the mid-point O of the dipole AB coincides with the centre of a spherical reflector S, and

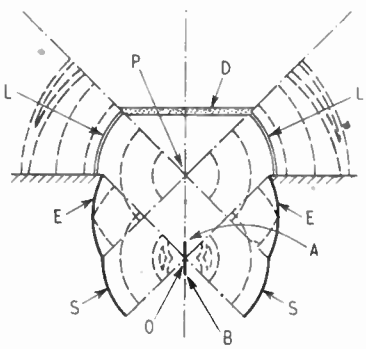

Underground V.H.F. aerial system.

with one focus of an elliptical reflector E. The radiation from the dipole is split into two parts, that emanating from the half OB being "folded over" by the reflector S and superposed, in phase, on the radiation from the half OA, the combined fields being brought to convergence at the conjugate focus P. In the case of a vertical dipole, this brings the horizontally polarized waves to the boundary of the beam at P, which is at ground level, thus preventing the formation of secondary lobes.

A lantern or dome DLL protects the installation from the weather, and may be made transparent to the rays only at the parts marked L. The system can also be used, in an inverted position, for radiating television signals from an elevated aerial, or for microwave signalling from an aircraft to ground.

H. M. Dowsett. Application date January 27th, 1941. No. 576342.

LEAKAGE OF CENTIMETRE WAVES

STEEL wool, such as is used for cleaning cooking utensils, is found to prevent the escape of energy through any small aperture in the screening case of apparatus for generating centimetre waves. In one application, a tuning-control shaft is passed through a plain bearing in the wall of the case into a tube of larger diameter. One end of the tube is soldered to the internal face of the wall, and the other end forms a second plan bearing for the shaft. The space between the shaft and the tube is then packed with the metal wool, which prevents leakage by attenuating the waves that would otherwise escape. It will serve the same purpose when used as a packing, or washer, for the screws which fasten down the cover, say, of an inspection aperture.

The General Electric Co., Ltd.; E. G. James; and A. O. E. Lindell. Application date, August 20th, 1943. No. 574401.

The British abstracts published here are prepared with the permission of the Controller of H.M. Stationery Office, from specifications obtainable at the Patent Office, 25, Southampton Buildings, London, W.C. 2, price 1/- each.

DETECTING BURIED METALS

THE presence of a land-mine or booby trap is indicated by the change of inductance which the buried metal produces in a search-coil forming one of the arms of a balanced bridge circuit. The bridge is energized by a valve oscillator or small alternator, a signal being given as soon as the circuit balance is upset.

To offset the effect of temperature changes, the search-coil is mounted in close physical proximity to a non-inductive coil, which has identical resistance characteristics, but which is electrically in circuit with the balancing coil of the second arm of the bridge.

At sea, the degaussing coil, normally used to protect a ship against the magnetic type of mine, is further utilized as the search-coil of a balanced bridge circuit, for indicating the proximity of any type of sea-mine, or of a submarine.

Cinema-Television, Ltd., and S. S. West. Application date March 29th 1943. No. 575443.

PERMEABILITY TUNING

IT has already been proposed, for the purpose of opening out the tuning near the short-wave end of the scale, to replace the movable powdered-iron core, which is usually cylindrical, by one which is tapered along its length. However, it is then found that the taper tends to produce a slight tilt or "wobble," which is liable to jam the movement of the core through the hollow former of the coil, particularly when the tuning-control is of the cord-and-pulley type.

To avoid this difficulty, the core is made cylindrical, but is formed with longitudinal grooves, of selected width, and of a depth which decreases progressively from the leading end. Sufficient of the circular periphery is left intact to provide a substantially smooth bearing-contact along the inside of the hollow coil former, thus preventing any tendency to wobble. Trimming adjustments can be made by loading one or more of the grooves with a mixture of magnetite and an adhesive carrier.

Marconi's Wireless Telegraph Co., Ltd. (assignees of W. E. Newman). Convention date (U.S.A.), March 24th, 1943. No. 576787.

WAVE GUIDE CONTROLS

SIGNALS flowing through a wave guide W are attenuated by moving a dielectric plate P, parallel to the short wall, through rack-and-pinion gearing G. The knob of the device carries a dial D, which is calibrated in decibels. The attenuation varies smoothly from zero, when the plate is in contact with the inner surface of the wall, to a maximum of, say, 40 decibels when it is halfway between the two walls. The plate is preferably made of phenol fibre, coated with finely divided graphite.

As shown separately, notches N are cut in each end of the plate in order to reduce reflection effects when the section containing the attenuator is inserted in series with the main guide

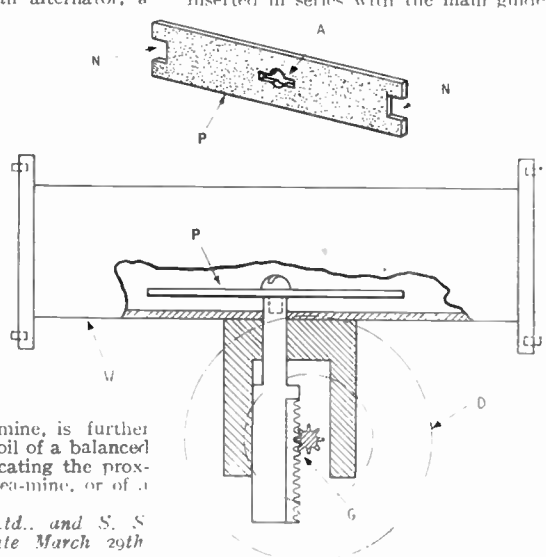

Constructional details of wave guide attenuator.

The centre aperture A for the driving spindle is similarly recessed, for the purpose of off-setting any variation of the attenuation with frequency. The dimensions are best found by trial.

Western Electric Co., Inc. Convention date (U.S.A.), May 7th, 1943. No. 576145.

World Radio History

ERIE

Electronic Component Products

RESISTORS · CERAMICONS · Hi-K CERAMICONS
SUPPRESSORS · POTENTIOMETERS
VITREOUS ENAMELLED WIRE-WOUND RESISTORS

ERIE RESISTOR LIMITED

CARLISLE ROAD · THE HYDE · LONDON · N.W.9 · ENGLAND
TELEPHONE: COLINDALE 8011-4 TELEGRAMS: RESISTOR, PHONE, LONDON CABLES: RESISTOR, LONDON
FACTORIES: LONDON, ENGLAND . TORONTO, CANADA . ERIE, PA., U.S.A.

World Radio History

Varley
REGD. TRADE MARK

Products of Quality & Reliability

MAINS TRANSFORMERS
A.F. TRANSFORMERS
SMOOTHING CHOKES
THERMAL DELAY SWITCHES
POWER RESISTANCES

Made by

OLIVER PELL CONTROL LTD

Telephone: WOOLWICH 1422
CAMBRIDGE ROW WOOLWICH S.E.18

NOW IN 1¼"

THE "Q-MAX" CHASSIS CUTTER
No more scraping or filing.
Cuts holes easily and cleanly.

Size of hole 1¼" . . . 12/6 Size of hole 1⅛" (octal) 10/6
Post 9d. extra. Pat. Applied for

YOU'VE BEEN WANTING—

- "Q-MAX" "R" METER
  Calibrated 0—9. Specifically designed for AR88 receivers and includes back plate for direct fitting.
  Full scale deflection 5mA. 54/6
- 813 CERAMIC VALVE HOLDERS
  Large silver plated contacts 8/9
- "Q-MAX" RTS UNIVERSAL MODULATION TRANSFORMER. 100 watts audio to modulate 200 watts RF. .. .. 6 GNS.
- "Q-MAX" SLOW MOTION DIALS for Individual Calibration.
  8—1 (Dial 6½ × 3½) 15/6. 50—1 (Dial 10 × 6¾) 66/-

Obtainable from your "Q-MAX" Dealer, or direct from:—

ILLUSTRATED CATALOGUE 6D. Post Free

BERRY'S (SHORT WAVE) LTD.
25, HIGH HOLBORN, LONDON, W.C.1
(Opp. Chancery Lane) Tel.: HOLborn 6231

MICRO-VARIABLE CONDENSERS

Finest quality, as made for the Air Ministry. All have ceramic insulation, silver plated vanes, and have standard ¼" spindles.

STRATTON MICRODENSERS (Eddystone)

Code E18. 18 mmfd double spaced, 3/9. E40. 40 mmfd double spaced, 4/3
Code E60. 60 mmfd single spaced, 4/3. E100. 100 mmfd single spaced, 4/6
Code E160. 160 mmfd single spaced, 5/-

MIDGET POLAR CERAMIC

Baseboard mounting with double end plate, bar type, ball bearing.
Code BB25, 25 pf, 2/9. BB50. 50 pf, 3/-. BB100. 100 pf, 3/3
Ditto panel mounting type.
Code P25. 25 pf, 2/9. P50. 50 pf, 3/-. P100. 100 pf, 3/3
Ditto but 2 Gang or Split Stator. The ideal band spread condenser, both double spaced.
Code 2P6.4. 2 × 6.4 mmfd, 3/9. 2P3.5. 2 × 3.5 mmfd, 3/9
Baseboard 2 Gang or Split Stator.
Code 2BB25. 2 × 25 mmfd, 4/-. 2BB100. 2 × 100 mmfd, 4/9
Midget 2 Gang or Split Stator. All ceramic end plates, ball bearing, panel mounting.
Code 2C5. 2 × 5 mmfd single spaced, 3/9. 2C25. 2 × 25 mmfd, 4/3
Code 2C10D. 2 × 10 mmfd double spaced, 4/3. 2C15D. 2 × 15 mmfd, 4/3

SINGLE MIDGET SILVER MICROVARIABLES

Smallest air-spaced condenser made. Panel mounting.
Code T100. 100 pf, single spaced, 3/3. T20. 20 pf, double spaced, 2/4

SORRY! All Slow Motion Drive Dials advertised on p. 16 December issue are "Sold Out." Send for List W/3.

RADIOMART
G5MI (HAM) LTD.

48 HOLLOWAY HEAD, BIRMINGHAM, 1

FOR THE RADIO SERVICEMAN DEALER AND OWNER

The man who enrols for an I.C.S. Radio Course learns radio thoroughly, completely, practically. When he earns his Diploma, he will KNOW radio. We are not content merely to teach the principles of radio, we want to show our students how to apply that training in practical, every-day radio service work. We train them to be *successful!*

Write to the I.C.S. Advisory Dept. stating your requirements. Our advice is free and places you under no obligation.

You may use this Coupon

INTERNATIONAL CORRESPONDENCE SCHOOLS Ltd.
DEPT. 38, INTERNATIONAL BUILDINGS, KINGSWAY, LONDON, W.C.2

Please explain fully about your Instruction in the subject marked X
Complete Radio Engineering Radio Service Engineering
Elementary Radio

And the following Radio Examinations:—
British Institution of Radio Engineers.
P.M.G. Certificates for Wireless Operators.
City and Guilds Telecommunications.
Wireless Operator and Wireless Mechanic, R.A.F.

Name..... Age.....
Address.....

World Radio History

Rate 6/- for 2 lines or less and 3/- for every additional line or part thereof, average lines 5-6 words. Box Numbers 2 words, plus 1/-. Press Day : February 1947 issue, first post Wednesday, January 8th. No responsibility accepted for errors.

WARNING

Readers are warned that Government surplus components which may be offered for sale through our columns carry no manufacturer's guarantee. Many of these components will have been designed for special purposes making them unsuitable for civilian use, or may have deteriorated as a result of the conditions under which they have been stored. We cannot undertake to deal with any complaints regarding any such components purchased.

NEW RECEIVERS AND AMPLIFIERS

NEW amplifier, 6V6's, 12in spkr., 1mfof case; £17/10.—23, Wellington Rd., Hatch End, Middx. [6610

T.R.F. ac/dc midget kit of parts: 200-250v wkg. £4, valves £2/9/6, speaker £1/7/6, cabinet £1/7/6, list prices; send for lists; cash with order or c.o.d.
HENRY'S, 5, Harrow Rd., Edgware Rd., W.2.

COMMUNICATION receivers. — "Dale" will have them as soon as trading conditions allow.—Remember—Dale Electronics, Ltd., 105, Bolsover St., W.1. Mus. 1023.

FERGUSON model 909 universal ac/dc 5-valve superhet, 100-250volts, walnut cabinet, new; 12gns, plus purchase tax £2/14/3.—West Central Radio Supplies, 259, Grays Inn Rd., London, W.C.1. Tel. Ter. 6777.

1946-7 new radios.—Brand new Universal Midgets, a.c.-d.c. mains, med.-long waves, 4v, perfect goods, in makers' sealed cartons with guarantees; £12/17/6; cash with order; executed rotation; send s.a.e. for list leading makes sets.—Radio Bargains, 261-3-5, Lichfield Rd., Aston, Birmingham, 6. [6545

14 watt amplifiers for mike or gramo operation, low intermodulation distortion, 25gns; transformers (bakelite impreguation, special stalloy), from £1/2/6; castings, turning, duraluminium cases and decks to customers' specification.—R.R. Development Laboratories (consulting engineers), Barnard Rd., Bradford. [5801

TELERADIO. — Replacement radiogram chassis, model 50A, ready for immediate delivery, 7-stage all-wave superhet, with negative feed back, size 13½×5½×7 factory assembled and tested, £12/12, plus P.T. £2/14; amplifier for mike or records, a.c./d.c., 4.5 watts output, assembled and tested, £5/15; all-dry midget superhet for car radio, etc., complete in aluminium case, size 10×6×6, £10/10, plus P.T. 45/-; all above and many others available for home construction with considerable cash saving; stamp will bring full lists.—Teleradio (Dept. W.W.), 157, Fore St., N.18. Tottenham 3386. [6627

BRIERLEY "Ribbon" and "Armature" pick-ups. Please write your name and address in block letters and include 3d. for booklet containing illustrations, responsive curves, technical details, delivery and prices. These booklets explain aspects of pick-up design, developments, including the "floating element" design leading to the use of ¼ and ⅛ oz downward pressures; the importance of adequate and constant point pressure and its practical achievement; correct point shape; the relation of pick-up weight, point pressure and vertical motion, etc., etc.—J. H. Brierley, Ltd., 46, Tithebarn St., Liverpool, 2. [5701

CHARLES AMPLIFIERS.—Announcing a new version of their famous HFA1 amplifier—the HFA3 incorporating a pre-amplifier to enable the use of moving coil pick-ups direct; this amplifier in conjunction with the Lexington moving coil pick-up and the B.A.F.C. twin cone speaker provides the highest obtainable fidelity of reproduction; the complete range now comprises amplifier HFA1 7watt cathode follower output for crystal pick-ups; HFA2 single-ended for crystal pick-up; the HFA3 for moving coil pick ups; tuner unit TU2 combination superhet t.r.f. feeder unit; full constructional blueprints 2/6 each; full kits or separate components available or supplied ready assembled; stamp for comprehensive catalogue.—Charles Amplifiers, 1c, Palace Gate, Kensington, London, W.8. [6641

RECEIVERS, AMPLIFIERS—SECOND-HAND

FOR sale, Hallicrafters Radio S20R; price £40.—Box 4659. [6540

FOR sale, Hallicrafter radio rec.-transmitter, Super Skyrider model.—Box 4662. [6551

R.1155 R.A.F. rcvr., excel. cond.; £12/10.—Lindow, 23, Panmure St., Dundee.

MARCONI 707 television, all-wave radio, 7in tube, overhauled; £35.—Box 5038.

PARTRIDGE

Precision Built

TRANSFORMERS

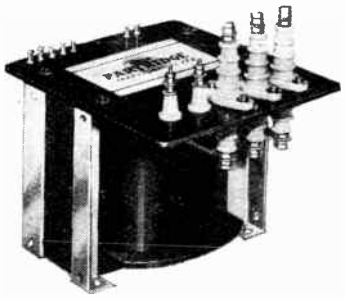

Incorporating the following features :—

- Silver plated turret terminals giving a low potential drop and carrying up to 15 amps. Adequate room on each for easy soldering of several external circuit wires.
- Permanent indelible marking of terminals by means of a transfer.
- Laminated plastic panel of the highest electrical grade.
- Firm clamping of the laminations by means of scientifically designed precision steel pressings with a large margin of strength.
- All metal fittings protected by cadmium or nickel plating.
- Bobbin with flanges of optimum shape for the protection of windings and location of the outleads.

It should be noted that accurate fixing centres and overall dimensions are ensured by close manufacturing tolerances.

Telephone: *Abbey 2244*

PARTRIDGE TRANSFORMERS LTD

76-8, PETTY FRANCE, LONDON, S.W.1

SPECIAL Offer.

A CHANCE to secure a first-class communication receiver at less than half the price of this type of set.
WE have for disposal a very limited number of factory converted ex-R.A.F. model 1155 receivers. These have had a power pack, output stage and headphone jack included in the standard chassis. The wave range is 18.5 Mcs to 75 Kcs, and the whole receiver is priced at 30 guineas.
ALSO the famous model 58 Walkie-Talkie, complete with valves, aerials, 'phones and batteries as originally issued at 10 guineas. Or with spare set of valves extra (£5/10 in value) complete at 14 guineas.
ALL above prices are carriage paid to your address. Terms cash with order. To avoid disappointment early ordering is essential.
TUE Radio, Ltd., 491, London Rd., High Wycombe. [6670

HALLICRAFTERS SX24 & spkr.—Parties., Brackendale, Etching Hill, Rugeley, Staffs.

PRESELECTOR RME DB20, 6 bands, 550-32,000kcs, 230 ac; best offer over £15.—Box 5019. [6609

COMMUNICATIONS receiver 7v superhet, brand new, £20.—Burgess, 119, Wembley Pk. Drive, Wembley. [6672

SALE, 1155 receiver, internal power pack, 6V6 output valve, plugs for 'phones or speaker; £18/10.—Box 4898. [6563

HALLICRAFTER CHL-46130 27.8 to 143 mc/s, 110/230v a.c., £40; also R1155, good order, £10.—Box 5071. [6631

A.C.S. RADIO, 44, Widmore Rd., Bromley, Kent, offer small selection com. sets, radio receivers and amplifiers; list free.

A.C/DC Rees-Mace 6-valve amplifier for radio, mic., or gram., unused, new 1946; £22.—Ager, 56, Cambridge Rd., Colchester.

HALLICRAFTERS S20, perf. cond., a.c., stored during war, recently overhauled, original packing, booklet; £25.—Details Box 4894.

COMMUNICATION receiver, 2 R.F., F.C with separate osc., 3 I.F., X'tal gate and variable band width; details given; £38.—Box 5076 [6639

QUAL. amplifiers, ac 8 watts P.P., 10in sp., also P.P. neg. feedback, big output, Avominor; dc £3.—43, Northwood Gdns., Greenford, Middx. [6607

MARCONI C.R. 100/2 communications 11 valve receiver, 2 r.f., 3 i.f., b.f.o., crystal filter, 60kc-30mc cont., a.c. or batt. operation, circuit, etc.; £40 or best offer.—Box 5075.

HALLICRAFTERS' Skyrider Marine S22R, 110/125 a.c./d.c., 8v, 4 bands covering 110 kc to 18 mc, as new, original carton; best offer over £30 (thirty pounds).—Box 5074.

HAMMARLUND Sc-499A 9 valve, 2RF, 3IF, BFO, X, TAL, send-rec., 3watt LS-phone, O/P, 1.5-18mc, 6 range; £37/10; as new.—1 Lilleshall Rd., Birmingham, 26.

30 watt Trix amplifier, double turntable, pick-ups, complete in oak cabinet, as brand new, proof, demonstrate; genuine reason for sale; £68.—Bailey, 25 Foxfield Rd., Orpington, Kent. [6552

R.M. Radio 7-valve hand-built de luxe set, h.f. det. paraphase amplifier, large transformer, each stage screened, recently removed from storage, believed good order.—Apply Monarch 1722. [6531

SALE, H.R.O. Senior, perfect, £60; R.C.A. 77E, perfect, £50; both with spares; Garrard motor and pick-up, £4/10; 807-20/-, 955 22/6, 954, 956 27/6, unused; s.a.e. for other spares.—Box 5013. [6608

NATIONAL HRO-MX complete coils, 50kcs to 30mcs, mains power unit, 6volt battery power unit with spare OZ4 rectifier; best offer above £60 secures; excellent condition, 35 hours' use only.—Box 4895. [6557

10-VALVE communication receiver, American built, but modified for 230v ac-dc mains, coverage 1.5 to 18 mc in six bands, calibrated in frequency, superb condition; first £30 secures.—Griffiths, 62, Lynn Rd., Ilford, Essex. Tel. Val. 7593. [6612

R.1155 R.A.F. receivers as described in *Wireless World*, July, excellent condition, £15; can be supplied modified for civilian use, receivers already purchased expertly modified to your requirements, and amplifier/power packs supplied.—R.T.S., Ltd., 8, Gladstone Rd., Wimbledon, S.W.19. Tel. Lib. 3303 [5659

SPECIAL offer.—3,000 Govt. surplus wireless control units, each containing 30 high-grade components, including 3 telephone type switches, microphone transformer, tuneable buzzer, Morse key, 4mfd. 2mfd condensers, etc., etc.; price in quantity 12/6 ea. or £1,500 the lot.—H. S. E., 587, Bearwood Rd., Smethwick, Staffs. [6524

TEST EQUIPMENT

WESTON model E772 analyser, perfect £15; Hunts' all-wave signal generator £6; offers considered.—Box 5123 [6650

World Radio History

RELIANCE
POTENTIOMETERS

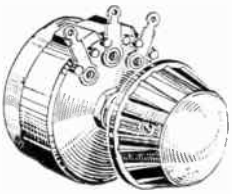

TYPE T.W.
Continuous Wire-Wound
(as illustrated)

Rating: 5 watts (linear)
3 watts (graded)

Ranges: 10-100,000 Ω linear Max
100-50,000 Ω graded ,,
100-10,000 Ω Non-Inductive

Characteristics:
Linear, tapered, graded, log., semi-log inverse log., non-inductive, etc.

Write for full details to:

RELIANCE
Manufacturing Co. (Southwark) Ltd.
Sutherland Road, Higham Hill,
Walthamstow, E. 17
Telephone: Larkswood 3245

LASKY'S RADIO
NEW YEAR'S SPECIALS
All Orders Post Free

EX GOVERNMENT H.F. PACKS. BRAND NEW! MIDGET COMPONENTS! AMAZING VALUE! Consisting of:—Two Midget Valves, IT4 and 1S5. Two Button Valveholders (Ceramic). Approx 24 Midget size condensers and resistances, double potentiometer, 3-way, 4 pole Yaxley type switch, Midget transformer, trimmer, nuts, bolts, group boards. Price 25/-. Limited quantity only.

I.F. UNITS IN METAL CASE. Size 4½" × 2½" × 1½". Consisting of:—One Midget valve IT4, Midget Ceramic valveholder, Midget I.F. transformer 465 Kc/s, resistances and condensers, group boards. Price 15/-.

A FEW ITEMS FROM OUR EXTENSIVE STOCKS. VALVESCREENING CANS, BEST QUALITY, 2/3 each. WEARITE "P" COILS, All types, 3/- each.

WEARITE MIDGET I.F. TRANSFORMERS, 465 Kc/s, 10/6 each. **LONG & MEDIUM WAVE COILS,** High gain, 8/6 per pr. **A.E. & H.F. I.F. TRANSFORMERS,** 465 Kc/s, air spaced trimmers, 7/6 each, 14/- pr.

MICROPACK ELECTROLYTIC CONDENSERS, 8 mfd 450 v.w., 4/6; 350 v.w., 1/-. 16 mfd. 500 v.w., 4/6. 8 × 8 mfd. 500 v.w., 5/6. 4 mfd. 600 v.w. **OIL FILLED CONDENSERS,** 4/9 each. 4 mfd. 800 v.w. **OIL FILLED CONDENSERS,** 15/9 each. 250 mfd. 12 v.w., **MICROPACK CONDENSERS,** 2/6 each. **ALL SIZES P.M. MOVING COIL SPEAKERS,** 2½", 3½", 5", 6½", 8", 10" & 12".

ALL POPULAR MAKES, ROLA, GOODMANS, CELESTION, PLESSEY, PAGE, TRUVOX, R. AND A.

EX ADMIRALTY MAINS TRANSFORMERS. Heavy Duty, 1,000 volts (500-0-500) secondary 170 m a and 4 volt, 4 amps. Primary 230 volts. The Very Best Quality. Price, 55/-. Limited Quantity Only.

We carry large stocks of all Radio Components. High Voltage Condensers, Radio Valves, Mains Transformers, Coils, Chokes, Output Transformers, Speakers, Tubular Condensers of all types, Resistances, etc., etc.

Our unconditional guarantee covers all goods. Satisfaction or money refunded. Send 1d. for Our Current List and Bulletin. TERMS: Cash with order, pro forma, or C.O.D. No C.O.D. under £1.

LASKY'S RADIO
370, Harrow Road, Paddington, W.9
Opp. Paddington Hospital. 'Phone: Cunningham 1979

TAYLOR meter, 83a., a.c./d.c., 4,000 ohms per volt, new, unused; £12.—Box 5070.

MULLARD cathode ray oscillograph GM-3152, little used; offers?—Write Latham, Little Hill, Much Hadham, Herts. [6584

B.P.L. model R.S.600 all-wave signal generator, practically unused; £16.—Beevers, 7, Richmond Rd., Coulsdon, Surrey.

LABGEAR latest electronic fault tracer, comprising oscillator, signal tracer, R. & C. bridge, insulation test, etc., new, unused; 30gns.—N.R.S., 66, Parkhill Rd., Ldn., N.W.3.

PORTABLE lab., fundamentally a high-impedance valve voltmeter (20 megohm on dc), this versatile instrument also gives 6 ranges each capacity and resistance, to 500 mfds. and 500 megohm.

COMPLETE range of test equipment, including above, is described in our new 10-page lists.—Please note address of our new and enlarged premises, Maclachlan & Co., 16, Thistle St., Stirling. [6591

WAVEMETERS, ex-Govt., class D No. 1 Mark II, ranges 1,900-4,000 kc/s, 4,000-8,000 kc/s, check frequencies at intervals of 1 mc up to 25 mc/s, oscillator crystal check, battery operated, supplied with spare vibrator, spare valve, and instruction book, brand new; £6/15, carriage paid; send for fully descriptive leaflet.—U.E.I. Corpn., 32, St. Gabriels Rd., London, N.W.2. [5910

ALL-WAVE signal generator, non-drift coil turret (pat. pending), 400 cps. anode modulation, cathode stabilised oscillator, scale calibrated 30 mc/s-100kc/s, 10-3,000m, ruggedly constructed for use in vertical or horizontal position, self-contained handle, integral storage for mains and output leads; 10½gns; orders in rotation.—R.R. Development Laboratories, Ltd., 26, Hawes Rd., Bradford. [5929

VALVES

9-INCH television tubes, new, immediate delivery; focus and scanning coil units and rubber masks.—G. R. Ross, 113, Sutherland Ave., Maida Vale. Cun. 1717. [6581

CLEARING out.—Hammarlund BC342N, 10v Xtal BFO, 1.5-18 mc/s in 5 bands, Meissner freq. (out of order); 61 valves, incl. 807s, 1625s, 815, 832, 1619, 3C24/24Gs, 6V6s, 9003s, 9002s, 955s, 1825s, Loctals, etc., also H.V. Dubilier capacitors, 10mfd, 1,000v, and other values; ganged condensers, transmitting and RX, with geared drives.—Enquiries and offers, s.a.e., to Kerr, 271, Eldon St., Greenock, Renfrewshire. [6599

NEW LOUDSPEAKERS

HIGH quality, precision-built speakers, Ticonal magnets, detachable diaphragms, die-cast chassis, twin cone.—Broadcast & Acoustic Equipment Co., Ltd., Broadcast House, Tombland, Norwich 26970. [6435

LOUDSPEAKERS, SECOND-HAND

B.T.H. R.K. 12in energised rectifier; 85/-, offer; snip.—Box 5124. [6651

HARTLEY-TURNER model 215 loud speaker, unused; £8/5.—Box 4457. [6526

VITAVOX K12/10, new cond.; seen S.E. London; £6 or nearest offer.—Box 4893.

HARTLEY-TURNER twin cone a.c. model with rectifier; £5.—Beevers 7, Richmond Rd., Coulsdon, Surrey. [6633

12-INCH Goodman auditorium speaker, £9; 9-inch Columbia electro magnet super quality loudspeaker, £4/10.—Clarke, Wilcot House, Bisley. [6605

VITAVOX K12/20 Goodman Infinite baffle for corner, 20 watt distortionless amplifier; table and floor radiogram cabinets; (London).—Box 4939. [6583

EIGHT Vitavox 4-cell projector speakers, fitted car mounting, in perf. cond., with 20-watt pots; will sell separately at £12 each, or £90 the lot; list price £21 ea.—Box 4656.

LABORATORY-MADE Duplex corner horn, consisting of separate bass & treble horn loaded units, with frequency allocating network, output transformers for push-pull PX4 or PX25 valves, adjustable bal., superb qual., smooth response & freedom from focusing & harmonic distortion; (London).—Box 4938.

DYNAMOS, MOTORS, ETC.

ROTARY convertor, 230 d.c. to 115 a.c., 750v.a. 60cy., with 470watt auto trans. tapped 90 to 250volt; offers.—Box 5073. [6636

ROTARY convertor, E.D.C., 220-volt D.C. to 230-volt A.C., 90 watts, smoothed and silenced, good condition; offers.—B. & S. Electrical Contractors, Ltd., 1, Bridge St., Guildford, Surrey. [6604

BATTERY chargers for home and export, 4 models, 2-6-12v. 1, 2, or 4amp dc, any mains voltage; generous trade terms. Write for catalogue. Tel. Hoddesdon 2659.—The Banner Electric Co., Ltd., Hoddesdon, Herts.

GRAMOPHONE AND SOUND EQUIPMENT

NEW mica m.c. microphone; £3/10.—Field, 130, Florence Rd., Parkstone, Dorset.

M.S.S. studio disc-recording machine, brand new, never used; Surbiton district; £200 (s.a.e.).—BM/SINE, London, W.C.1. [6525

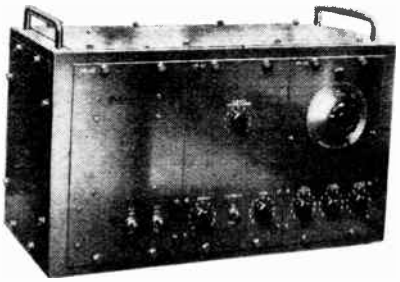

PUBLIC ADDRESS
by
ACOUSTICAL
for the very best in
REPRODUCTION
DESIGN
WORKMANSHIP
SERVICE

We will gladly send you full details and specifications of the full range of ACOUSTICAL P. A. Equipment on request.

ACOUSTICAL
MANUFACTURING CO. LTD.
HUNTINGDON. TEL: 361.

There's no corrosion of the connections in the Solon Electric Soldering Iron. Tucked neatly away at the end of the handle, the heat can't get at them. Efficient rubber sleeve cord grip prevents sharp bending of the flexible. The heating element is INSIDE the copper bit—giving constant heat; no waste of current! Features that make Solon soldering quicker, cleaner, safer! All Solon irons are supplied with 6ft. of Henley 3-core flexible. Made for the following standard voltages—200/220, 230/250.

Made in England.

Illustration shows standard 240 watt model. Other types and sizes for various specialised jobs.

SOLON
Electric
SOLDERING IRON FOR INDUSTRIAL USE
W. T. HENLEY'S TELEGRAPH WORKS CO. LTD
Engineering Dept., 51-53, Hatton Garden, London, E.C.1

World Radio History

RADIOGRAMS! Radiograms! Radiograms! Superb new 1947 all-wave.
MODELS—R.G.D. auto., £179/14/4; 1947 Sound Sales Polyphonic, £82/0/3; £100/7/9 automatic, 7-valve, all-wave. Post orders and genuine enquiries welcomed, safe delivery guaranteed (rotational); a pleasure to send full details; large s.a.e. speeds reply.—Snell, Arcade, Swansea. Est. 1900. Tel. 3784. [6510

BELL and HOWELL/G.B. H16 projector, perfect condition, as new; £350.—Burgess, 119, Wembley Park Drive, Wembley.

COILS for "W.W." tone control and filter circuits (Brierley & Hartley spec.), high fidelity, mic. line and output transformers; s.a.e. full list.—R. Clark, 30, Langland Cres., Stanmore, Middx. Wor. 5321. [6403

MAKE your radio or gram. live with the Holmer "treble-bass" tone control unit; lifts treble or bass independently; gain sufficient for low output pick-ups; built on chassis 10in×6in×3½in; price £6/15.—Box 3401.

INFINITE Baffle corner deflectors, scientifically designed acoustic chambers as reviewed "Wireless World," June; send for catalogue.—Broadcast & Acoustic Equipment Co., Ltd., Broadcast House, Tombland, Norwich 26970 [6434

TECHNIFON first-class direct recording machines, cutter heads, discs and sapphires, precision equipment for the professional and amateur; inexpensive home recorders soon!—Technifon, Ltd., 99, Belgrave Rd., London, S.W.1. Tel. 8814. [6613

EXPERT non-metallic needles.—We have over twenty-five years' experience in the selection, grading and special treating of Thorn needles; for use in pick-ups, type A thick, type B thin, 3/- per 10, including purchase tax; sharpener, 7/4; guaranteed harmless to the record.
EXPERT GRAMOPHONE & RADIO, Ltd., Ingerthorpe, Great North Rd., London, N.2.

PROFESSIONAL recording equipment, MSS. recording machine, 20watt amplifier, complete, £100, new, from stock; blank discs, etc.; full range Sound Sales equipment available; Garrard transcription motors and playing desks.—Liverpool Sound Studios, 83a, Bold St., Liverpool. [5348

VALRADIO moving coil pick-up, response 25-12,000cs, £6/10, plus £1/10/6 P.T.; high gain quality amplifier, 2 PX4s in push-pull, 2 inputs, 2 output impedances, £18; sapphire needles for Valradio pick-up, 15/-; for standard pick-ups, 12/6.—Valradio, 57, Fortess Rd., London, N.W.5. [6397

BRITISH Sound Recording Association covers all interests of the professional and amateur recording engineer and quality reproduction enthusiast.—Details of information bureau, meetings, publications and membership application form from Hon. Secretary, BCM/BSRA, London, W.C.1.

DYNATRON supreme reproducer, new 1947 12-valve, all-wave, a.c. Ether Conqueror autoradiogram, fitted with revolutionary pick-up, with sapphire point, variable selectivity, push-pull output triodes, 9watts undistorted output, 12in speaker, separate bass and treble tone controls; £195/11/3, including tax; those genuinely interested in purchasing an instrument of this calibre are invited to write for illustrated folder; production limited, early application respectfully advised.
SNELL, Arcade, Swansea. Est. 1900. [6511

DECOLA full frequency range recording reproducer by Decca, frequency response 30-14,000 cycles per second, three 12in speakers, 4 pairs matched triodes, distortionless reproduction, mixed automatic changer, revolutionary pick-up, sapphire point, storage space for 350 records; £216/11/3, including tax; in-built radio available; those genuinely interested in purchasing an instrument of this calibre are invited to write for illustrated folder in colour; production limited, early application respectfully advised.
SNELL, Arcade, Swansea. Est. 1900. [6512

TRANSMITTING EQUIPMENT

PRE-WAR 120-watt transmitter, in four unit panels in 4ft 6in rack, on wheels, complete with all valves, etc., in working order. Power pack 2 half-wave M/V rectifiers, full-wave rectifier, 3 transformers, etc. Tritet C.O. buffer doubler for 7, 14, 28 metres. 50-watt modulator with class B 4,300 A's (incomplete). P.A., with class B STC 4,033 A's, Eddystone condenser coils, etc.; quantity spares; seen Byfleet. £25 or offer.—Box 4900.

FOR sale, Marconi medium frequency apparatus, comprising one combined transmitter (type T.P.8) and receiver (type R.P.42/1), complete with valves, control panel, speaker and microphone, separate power unit for 230v ac; transmitter two-position, crystal controlled, using two 807 valves; receiver has pre-set tuning; two other similar receivers for use with above, one for 12v operation and one for 230v ac supply.—Offers to Chief Constable, East Suffolk Police, County Hall, Ipswich.

More Quality Bargains by
ELECTRADIX RADIOS

LABORATORY INSTRUMENTS. Portable Weston Substandards. Model 155, A.C. Ammeter, 0-100 amps, mirror scale, zero adjuster, in polished case, 7in. x 6½in., with carrying handle. Weston Model 1, multi-range, D.C. meter, 3-13-75-300-1,500 m/a, 5-15-150 amps., mirror scale, zero adjuster meter, mounted on polished wood base, and in carrying case. Weston Model 1, voltmeter to match, reading 3 and 150 volts, with external resistance for 750 volts.
FERRANTI Multi-range D.C. Meter, 75 m.v., 3 volts, 30 volts external shunt for 30 amps. and 600 amps., in leather carrying case.
ELLIOTT D.C. moving coil, dual range voltmeters, 2½in. flush panel type, 10 volts and 40 volts, 45/-. Milli-ammeters, 20 and 80 m a, 40/-. Ammeters 0-2.5 amps., 35/-.
SWITCHBOARD METERS. Iron-clad 4in. to 7in. dia. Amps. and volts. Send us your enquiries.
GALVOS. D.C. Moving Coil Mirror Galvo, reflecting beam by Tinsley, 100 ohms resistance, sensitivity 2½ microamps, per 1in. of scale at 1 metre, in polished wood case with glass front door. **£8 10s.** G.P.O. vertical circuit testing galvos, 15/-.
MEGGERS. Evershed Bridge Megger, with decade resistance box, **£35.** 500 volt Evershed Wee Megger.
MOTORS, D.C. 230 volt, 1.6 h.p. Newton shunt wound, 2,500 r.p.m., **£12.** 100 volt 1/100 H.P.K.B.B. shunt, protected type, 2,000 revs., with 20/1 reduction gear on C.I. base, 45/-.
MOTORS, A.C. 1/3 h.p., 4,000 revs., 230 volts A.C., 50 cycles, **£9.**
DYNAMOS, D.C. 6-12-24-30 volts. Send for special leaflet.
ROTARY CONVERTERS, D.C./A.C., with smoothing filter and cabinet, E.D.C. make, sizes from 50 to 230 watts, in stock. Send for list.
MOTOR PUMPS for Caravan or Bungalow. 12 volt D.C. motor pump, the S.T. model, handle 120 gallons per hour, **£6 6s.**, A.C., 230 volt type, **£6 6s.** and **£7 10s.**
BATTERY CHARGERS. The Nitnday Charger will keep your battery fit without attention; any A.C. mains voltage to 2-4-6-12 volts. Send for leaflet.
PETROL ELECTRIC Generating Sets for lighting and charging. 500 watts, single-cylinder 2-stroke, water cooled, self-oiling Stuart Turner engine, mag. ign., coupled to a 50/70 volt 10 amp. shunt dynamo, 1,000 r.p.m., **£45.** 3 K.W. Aster 4-cyl., 110/150 volt, 20/30 amps., **£55.**
CONSTRUCTORS PARTS for making your own wall telephones, ex-G.P.O. stock. Bracket mike, transformer and condenser, magneto bell, switchhook and contacts, hand magneto ringer, single receiver, cabinet 8in. x 6in. x 3in., fitted terminals and connection diagram for completing, 30/- each, or 50/- the pair, crg. paid.
CABINETS. The celebrated Mark III, ½in. mahog. cabinet, canvas covered, 13in. x 12in. x 7½in., with hinged lid and carrying handle, 15/-.
METERS. D.C. moving coil micro-ammeters, new, 2in. flush panel, zero adjustment, 500 ohms resis., 500 micro-amps., 60 -; D.C. moving coil, Milli-ammeters, 0-1 m/a, 2½in. dia., 55/- ; 4in. dia., 70/- ; double range, first grade m.c. voltmeters, 0-10 v. and 0-40 v., by Elliott, 55/- ; D.C. moving coil ammeters. Elliott, 2½ in. dia., 2.5 amps, 55/- ; delivery from stock.
VIBRATORS and Transformer. Mallory 12 volt 60 m/a. New, in metal can, 15/-. Special transformer, 37/6. Transformers for small welding jobs or soil heating, 230 volts 50 cy. to 12 volts 250/300 watts, totally enclosed, 75/-. Transformers double wound for Model work, 230/12 v. 3 amps., 32/6, 20 volts 2 amps., 30/-.
BELLS. Large Tangent ironclad bells, 6in. gong, 230/250 volts, A.C., new condition, 42/-. Circular A.C. Bells, 5/8 volts, 3½in. diam., bakelite base, 2½in. diam. metal gong, 6/6. House bells, bakelite base, with 2½in. gong, 6/9. Bell transformer, 230/3-5-8 volts, 7/6.
SMALL MOTORS for model work, 3-8 volts, work off battery or transformer, 17/6 each.
FANS. D.C. table fans, 110 volts, 12in. blade and guard, 45/-. Oscillating type, 55/-. Few 220 volt D.C., 12in., 55/- each. Fan motors only, bulkhead type 110/220 volts, 35/- each.

ELECTRADIX RADIOS
214, QUEENSTOWN ROAD, LONDON, S.W.8
Telephone MACaulay 2159

COMPONENTS—SECOND-HAND, SURPLUS

HENRY'S RADIO

OFFER the following outstanding lines:—
MIDGET H.F. unit. Comprising 1S5, 1T4 valves, 4 pole 3-way switch, twin volume control, 500mfd 12v wkg O/trans and 20 midget resistors and condensers, 25/-; new and unused.
MIDGET IF unit in aluminium can. Size 4½in × 2⅝in × 1in. comprising 465kcs midget IF transformer, iron cored, 1T4 valve and 8 midget resistors and condensers, 15/- new and unused. Also B.F.O. unit with 1S5 valve, iron cored, DSC and resistors, 12/6. 5in P.M. speaker, less trans., 19/-; 6½in P.M. speaker, less trans, 27/6; Pico-Packs 20mfd 12v wkg. 2/6; 10mfd 25v wkg, 2/6; 5 m a meter rectifiers, 7/6; W6 and WX6 Westectors 4/-; 6 and 12v vibrators, 4 pin, 9/6; 6v car radio trans, 15/-; telescopic 4 section aerial with screened lead, 25/-; headphones with plug, 1,000ohms, 7/6. Cash with order or c.o.d. (over £1). Send stamp for price list Wholesale and retail.
5, HARROW Rd., W.2. Paddington 2194

SUPREME RADIO,

746B, ROMFORD RD., Manor Park, London, E.12. Est. 15 years.
NEW lines for the service engineer: 2-gang 0005 condensers with fixing feet, 11/-, 3-gang 13/-; line cord, 3-way 60-70 Ω/ft, 15/- doz yds; dials, all-wave ivorine, 3½in× 4in 1/6, 6in×6in 2/-. M. & L. 1/6; midget chokes, 60 mils 6/-, 100 mils 10/-; 0.3 droppers fixing feet, 3/9; v/cs with sw., best makes 4/-, less sw. 3/9. wire wound, 10,000 less sw. 5/-; 2,000 Ω v/cs, job line to clear, 18/- doz; cardboard 8mfd condensers, 30/- doz. 25-25 18/- doz. 50-12 18/- doz; 0.1 tubular condensers, 500v working 4/- doz. 0.01 4/- doz, 0.25 metal wire ends fixing clip, 9/- doz (carbon resistances, ½watt, 200 Ω 470, 1,000, 10,000, 20,000, 27,000, 100,000, 220,000, 250,000, 270,000, 560,000, 1 meg 1.5 2.2 meg 3/- doz) (1 watt 47 Ω 12,000, 20,000, 75,000, 100,000, 150,000, 4/- doz) (2 watt 10,000, 23,000, 56,000, 5/6 doz; all known makes, wire wound, ½-1-2 watt assorted 500 Ω 1,000, 1,400, 1,500, 1,700, 2,500, 3,500, 5,000, 6,000, 12,000, 13,000, 14,000, 15,000, 45,000, 60,000, 65,000, 80,000, 90,000, 100,000, 120,000, 2/6 doz.
MIDGET speaker trans., 4/6; sleeving, 3/- doz yds; screen caps, 8/- doz; non-ring valves equivalents 80, 5Y3, 6J5, 7/6; "Airmaster" radio console table or chassis, delivered from stock.
S.A.E. all enquiries; terms, cash with order, no c.o.d.; send 6d. extra for postage and packing all orders under £5 [6366

VALUE! Matt has it!

SPEAKERS: 5in L/T., 15/6; 6in L/T., 17/6; 8in L/T., 22/6; all P.M.
ROTHERMEL crystal pick-ups, de luxe £2/16/3, including purchase tax.
VOLUME controls: Centralab, all values, 2/6 L/S; 3/6 W/S.
CONDENSERS: all 500v working, 8mfd, 2/10; 8+8, 4/9; 0.01, 0.05, 0.1mfd, 6/- per doz.; 4+4 100mfd 350 working, 2/6 ea.
INTERNATIONAL Octal valve holders, 3/- per doz, 30/- gross lots; 4-, 5- and 7-pin, 6/- doz.
LINE CORD, 2-way, 1/- per yard; 3-way, 2/- per yard; 0.3amp 60ohms per ft.
100 YD. coils 3mm flex, 12/6 a coil; 5amp 3-pin flush shuttered switch plugs, 8/6 each.
LARGEST stock of B.V.A. and U.S. valves in England. We supply anything in radio.
MATT RADIO SERVICE (Kin. 4881) 152 Richmond Rd., Kingston-on-Thames, Surrey

RADIOGRAPHIC, Ltd., 66, Osborne St., Glasgow,
OFFER the following:—Transmitting valves and components: T200, 189/-; RK20A, 94/6; 813, 110/-; OP30/600 (T20), 21/-; 866/866A (2V/400A), 27/6; HY51, 40/-; HY51A, 40/-; HY51B, 45/-; TZ40, 55/-; 830B, 25/-; 801, 21/-; 802, 20/-; 805, 110/-; 808, 40/-; 809, 25/-; 829, 82/6; 830B, 25/-; 832 (VT118), 45/-; 838, 40/-; RK25, 40/-; DET19 (RK34), 37/6; DA41, 55/-; VT104 (PT15), 25/-; HY60, 30/-; HY61, 26/-; HY65, 42/-; 211HD, 40/-; UX874, 30/-; U23, 26/-; KT8C, 25/-; PX25, 24/-; U52, 18/3; 100TH, 125/-; RK28, 94/6; 4274A (WE274), 20/-; 5C/100A (813), 155/-; 4356A (356A), 122/6; 5B/250A, (807), 30/6; 22V310A (83), 15/-; 4304CA (304B), 82/6; 90D3, 25/-; 1LN5, 17/6; 1299, 17/6; 1mfd 1,000v, 2/8; 4mfd 2,000v condensers, 15/-; 5w pots 2,000, 1,000, 500, 20,000 ohms, 3/9; air spaced trimmers, 5/50 pfd, 2/-; ceramic ribbed coil formers 6/5, etc. Labgear agents, s.a.e. for lists, orders over £1 c.p.
RADIOGRAPHIC, Ltd., Mail Order Specialists, 66, Osborne St., Glasgow, C.1. [6668

World Radio History

Summary of

G.L.

Equipments

1. **AC Gram.** 4 valve, 6 watts Home reproducer for records only. Chassis built, complete with valves — 6 gns.
2. **AC/18.** 12/15 watts P.P. Concert gramo. amplifier, in case with cover — 11 gns.
3. **AC/18HG.** Small P.A. Outfit. As No. 2, but with mic. stage £13 5 0
4. **SOF/18. Cine Amplifier.** As above plus P.E.C. input ..... 15 gns
5. **AC/24. General P.A.,** 20 watts P.P. with mic. stage. Electronic mixing, master gain control £16 5 0
6. **TRF/AC Unit,** in steel case with large tuning dial, for adding to any A.C. amplifier ..... 5 gns.

Fully illustrated leaflets available on each. All equipments are wired and tested.

Microphones, stands, speakers, and all accessories to suit above equipments.

Transformers, chokes and outputs, for those who prefer to build their own designs—the finest range you could wish for.

FOR SERVICE ON SOUND LINES, CONTACT—

General Lamination Products

294, BROADWAY, BEXLEYHEATH, Kent.

'ASTRONIC'

HERMETICALLY SEALED TRANSFORMERS

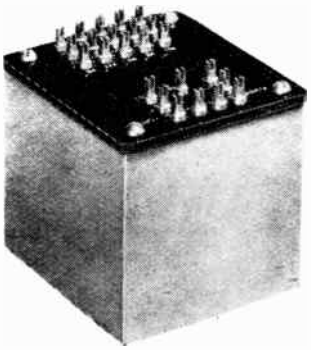

- Direct fixing to component structure —no strain on container to cause distortion or leaks.
- No unsightly fixing lugs external to container.
- Male or female threads, or upright or inverted mounting at will.

ASSOCIATED ELECTRONIC ENGINEERS Ltd.

DALSTON GDNS. · STANMORE · MIDDX.

Wordsworth 4474-5-6.

e.h.W.S.

SOUTHERN RADIO'S wireless bargains

LATEST radio publications.
"RADIO Valve Manual," equivalent and alternative American and British types with all data, 3/6; "Radio Circuits," fully illustrated receivers, power packs, etc., 2/-; "Amplifiers," fully descriptive circuits, 2/-; "Radio Coil and Transformer Manual," 2/-; "Short-Wave Handbook," 2/-; "Manual of Direct Disc Recording," 2/-; "Test Gear Construction Manual," 1/6; "Radio Pocket Book," formulas, tables, colour code, etc., 1/-; "Ten Hows for Radio Constructors," 1/-; "Radio Reference Handbook," cloth bound, comprehensive and up-to-date, covering all branches of radio, 12/6; "American Service Manuals," Sparton-Emerson, Crosley-Belmont (Parts 1 & 2), Stewart-Warner-Fada, Emerson, 12/6 per volume; "Radio Resistor Chart," colour codes at a flick, 1/- each; "Bulgin Radio Service Manual," 2/6; "Radio Constructor's Manual," 3/-; postage extra.
YAXLEY type 11-way rotary switches, 5/-; tubular condensers, 0.1+0.1+0.1 (cans), 2/6; resistances, brand new wire-ended, ¼, ½ and 1 watt, assorted values, 30/- per 100; ¼-watt only, assorted values, 20/- per 100; ½-watt, 22/6 per 100.
ACE "P.O." microphones, complete with transformer, usable with any receiver, 7/6; permanent crystal detector, 2/6; insulated push back wire, 25 yards, 5/-; insulated sleeving, assorted sizes and colours, 3/6 per doz yard lengths; single screened wire, 7/6 per doz yards; twin screened, 15/- per doz yards; aluminium panels, undrilled 16 gauge, 18in×7in, 3/6; 18in×9in, 4/6; ceramic and paxoline postage stamp trimmers, 30pf, single, 1/3 ea, double bank 2/-; Cutler Harmer power rheostats, 300hms, 4/6; power rheostats, 100hms, 4/6.
LUFBRA adjustable hole cutter, use on metal, wood and plastics, etc., 5/- ea, including postage; a large assortment of ex-Government material in stock.
R.A.F. 1155 receivers available from stock, these have been pre-tested and guaranteed, complete with plug, £15/15 (carriage and packing 7/6 extra); spare 1155 plugs, 8/6 ea.
SOUTHERN RADIO SUPPLY Co., 46, Lisle St., London, W.C. Gerrard 6653. [6411

SCOTLAND'S largest stockists.—Anything radio we have it.
EDDYSTONE—agents—Raymart
SEND for parts and kits list.
BUCCLEUCH RADIO MANUFACTURERS, Melville Terr., Edinburgh. Tel. Edinburgh 42803. Grams, Therm, Edin. [5139

CHARLES BRITAIN RADIO offers new bargains in radio spares.
MAINS transformers, fully shrouded, with feet, 350-0-350, 80ma, 4v and 6v types, 27/6; ditto, heavy duty, 120ma, for 2v, 4, and 6v heaters, and 4-5v rectifier, winding, 35/-; tuning condensers, 3-gang 0005 ceramic insulation, 10/-; 2-gang ditto, 10/-; 2-gang, with feet, standard type, 11/6; coils, superhet Ae and Osc, all-wave with diagram, 14/-; t.r.f. coils, dual band with reaction and diagram, 8/6 pr; i.f. transformers, 465 kc/s, air cored 12/6, iron cored 14/- pr; wave change switches, 4-pole 3-way, 4-pole 2-way, 3/6 ea; 2-pole 2-way, 2/9 ea.
LOUDSPEAKERS.—8in, less trans, P.M., 24/6, with trans, 30/-; 6in Goodmans, less trans, 25/-; 5in, less trans, 21/-; 12in Goodmans, £6/15; 12in Vitavox, £7; speaker transformers, Midget for pentode or power, 5/-; standard type pentode, 6/6; multi ratio 10-watt, 7/6; heavy duty multi ratio, 30-watt, 18 ratios, 25/-; 6L6 type, 27/; chokes, 360 ohms 60ma, midget, 5/-; 360 ohms 80ma standard, 6/-; heavy duty choke, 450 ohms 200ma, £1; Electrolytics, 8-16 mfd can 450v wkg, 6/6; 8-8 mfd, 6/-; 16 mfd can, 4/6; 8 mfd can, 3/-; B.I. blocks, 8 mfd, 450v wkg, 3/-; 25 mfd 25v, 50 mfd 12v, 75 mfd 12v, 1/9 ea; line cord, 3-way 0.3 amp, best quality, 60-70 ohms per foot, 1/6 per yd; droppers with fixing feet and slider, 0.2 amp, 1,000 ohms, 4/6; 0.3 amp 850 ohms, 5/-; midget chassis, drilled 5 valves, 9×4½in, 2/6 ea.
SPECIAL offers moving coil mikes, undamaged, in metal case with grille, 5/- ea; damaged 1/6; parcel of 36 assorted tubular condensers from 0.001 to 0.1 mfd, 10/6; parcel of assorted 72 1, ½ and ¼-watt resistors, from 100 ohms to 1 meg, 12/6; special parcel containing chassis, valve holders, coils, i.f. transformers, tag bars and 24 new condensers, £1; splendid value
NUMEROUS other lines in stock, including amplifiers, pick-ups, etc.; callers always welcome; trade supplied; terms, c.w.o. or c.o.d. £1.—Charles Britain (Radio), Ltd., Radio House, 2, Wilson St., London, E.C.2. Tel. Bis. 2966. [6624

SURPLUS of all types new radio components for sale; great opportunity.—Box 3521.

RADIO SPARES

MAINS TRANSFORMERS. Primaries 200/250 volts.
Secondaries 350-0-350 volts.

TYPE C. 100 ma. 4v. 5a., 4v. 3a.	34/6
TYPE D. 100 ma. 6.3v. 5a., 5v. 3a.	34/6
TYPE E. 120 ma. L.T.s as Type C	37/6
TYPE F. 120 ma. L.T.s as Type D.	37/6
TYPE H. 200 ma. Three L.T.s of 4v. 6a.+ 4v. 3a. Rectifier	47/6
TYPE I. 200 ma. Three L.T.s of 6.3v. 6a.+ 5v. 3a. Rectifier	47/6

Secondaries 500-0-500

TYPE J. 200 ma. Three L.T.s of 6.3v. 6a.+ 5v. 3a. Rectifier	56/-
TYPE K. 200 ma. Three L.T.s of 4v. 6a.+ 4v. 3a. Rectifier	56/-
TYPE L. 250 ma. Three L.T.s of 6.3v. 6a.+ 5v. 3a. Rectifier	59/-
TYPE M. 250 ma. Three L.T.s of 4v. 6a.+ 4v. 3a. Rectifier	59/-

Secondaries 400-0-400

TYPE R. 120 ma. 4v. 5a., 4v. 3a.	42/6
TYPE S. 120 ma. 6.3v 5a., 5v. 3a.	42/6

SPECIAL UNITS MANUFACTURED TO FRIENDS' REQUIREMENTS
Please note Types H to M have 2 of the L.T.s centre-tapped. Owing to dimensions and weights of these types, kindly add 2/6 for carriage and packing.

HEAVY DUTY MULTI-RATIO OUTPUT TRANSFORMER
120 ma. 15 watts, tapping for 6L6s in push-pull, PX4s in push-pull, low impedance triode, low impedance pentode, high impedance triode, **27/6**; complete instructions with each unit.

OUTPUT TRANSFORMERS. Special offer. Multi Ratio 20 : 1, 45 : 1, 60 : 1, 90 : 1, **7/6.**

SMOOTHING CHOKES, 20 henrys, 100 or 120 ma., **14/6**; 20 henrys, 150 ma., **16/6**; 30, 35 or 40 henrys, 200 ma. or 250 ma., **27/6.** Orders accepted by post only. Please help us to eliminate clerical work by sending cash with order. Please include postage with order.

WOULD FRIENDS PLEASE NOTE THAT OWING TO DEMAND FOR OUR TRANSFORMERS AND CHOKES WE HAVE CEASED TO STOCK OTHER RADIO COMPONENTS.

H. W. FIELD & SON,

Cable Works
STATION ROAD
HAROLD WOOD, ESSEX

YOU can become a first-class RADIO ENGINEER

We are specialists in Home-Study Tuition in Radio, Television and Mathematics. Post coupon now for free booklet and learn how you can qualify for well-paid employment or profitable spare-time work.

T. & C. RADIO COLLEGE

North Road, Parkstone, Dorset

(Post in unsealed envelope, 1d. stamp)

Please send me free details of your Home Study Mathematics and Radio courses

NAME .....

ADDRESS .....

W.W.55

World Radio History

ALIGNED INSTRUMENTS SERVICES, 1, Colworth Rd., Leytonstone, E.11.

ALL-WAVE H.F. stage coil pack.—The model 40 coil pack has been developed in response to the many requests for an all-wave coil pack having aerial, H.F. and oscillator stages; the coils used have extremely high "Q," and are fitted with adjustable iron cores; they are of the same type as are fitted to our famous model 30 series of coil packs; the pack consists of 3 aerial coils, 3 H.F. coils, and 3 oscillator coils, wavechange switch, all padders and trimmers, 3 wave bands covered, 16-50, 200-550 and 750 2,000 metres; the model 40 is completely aligned and gain tested before despatch; a blue print showing the model 40 in a recommended circuit is supplied; for use with 465 kc/s, I.F., price £3/3; high "Q" I.F. transformers to match model 40 coil pack, iron cored and permeability tuned, aligned and gain tested, price 17/6 per pair; 3-gang tuning condenser to match model 40, price 17/6; send 1d stamp for comprehensive price list of kits, coil packs and quality components. [6654

AMATEUR selling up, R.X. and T.X. tubes, transfmrs., components, etc.; s.a.e. list.—Box 5040. [6619

UNIVERSAL ELECTRONIC PRODUCTS (G8UQ), 36, Marylebone High St., London, W.1. Tel. Wel. 4058.

WE can supply from stock those components which are essential to the requirements of the amateur transmitter and experimenter, including polystrene sheet and tubes, paxolin, meters, Denco coils, i.f. transformers, etc.; we stock and thoroughly recommend Gardners transformers and chokes; send s.a.e. for lists.

WEYMOUTH 3 waveband coil pack, £1/17/6; complete kit of parts for ac/dc superhet, £7/10 (valves extra).

OUR works, which are under the personal supervision of G8UQ, have recently been enlarged and we are now in a position to offer speedier deliveries on constructional work of all types; no job is too small and, we trust, none too large; if you require anything from an extension spindle or small chassis to a complete 500-watt transmitter, why not consult us first? [6622

C.R.T.'s, 3in e'static in case, with H.T. network, 2 controls; £3; packing, etc., 4/6.—Houlgrave, 178, Highgate Rd., B'ham, 11.

TELERADIO.—See last month's issue for details of outstanding new coil pack for only 32/6; full lists available.—Send stamp to Teleradio (Dept. W.W.), 157, Fore St., Edmonton, N.18. [6628

COULPHONE RADIO, Station Rd., New Longton, Nr. Preston.—The return of Post Mail Order Service. New goods only. C.O.D. or cash with order. Orders over 5/- post free. Note prices.

EDDYSTONE Model 504 communications receiver. Rotational deliveries now commenced. SW Manual 2/6.

ALL Tungsram and B.V.A. valves; list prices.

WEYMOUTH 3W.B. superhet coil packs, 38/6. Midget iron cored I.F.T.s, 465 kc/s, matched pr., 19/6. 0.0005 two gangs with 2-speed drive, 16/6.

LINE Cord .3 amp, 60Ω per foot, 2-way 1/6 yd., 3-way 1/9 yd.; mains droppers, Feet, 2 sliders, .2 amp 4/3, 3 amp 4/6.

GOODMANS T2/1205/15 12in P.M. quality speakers, £6/15; Moreton Cheyney super quality 8-valve gram amplifiers, £22/10; battery chargers 6 and 12v at 3 amp, £6; Plessey 8in P.M. speakers, 10,000 lines, with pentode transfs., 29/6; T.R.F. tuning coils, M. & L., with reaction, A. and H.F., 9/6 pair; superhet coils, Ae. and Osc., S.M.L., 11/6 pair; "P" type coils, all types, 2/6 ea.; aluminium chassis, 4 sides, 16 gauge, 3in deep, 10in×8in 8/6, 12in×9in 9/6, 14in×9in 10/6, 16in×8in 10/6, 20in×8in 12/6; Pyrobit instrument soldering irons, 21/-.

MAINS transformers, highest quality, primaries tapped, 200/250 volts, 300/0/300, 60 m.a. 4v 3a, 4v 2a or 6.3v 2a, 5v 2a, 17/6; 350/0 350 100 m.a., 4v 6a, 4v 2.5a or 6.3v 3a, 5v 2a, 24/-; bobbins 15/6; 450/0/450 200 m.a., 4v 8a, 4v 4a, 4v 4a or 6.3v 4a, 6.3v 4a, 5v 3a, 42/6; or 6.3v 6a, 4v 2a, 4v 2a, 5v 3a, 45/-.

EDDYSTONE shortwave components.

BPL Test Sets, 17 range, latest type, £8/8/8.

SEND 2½d. stamp for new 16-page catalogue.

CIRCUITS.—"Dorset" series, new battery superhet 4-valve all dry 3-wave; AC 5-valve 3-wave superhet; AC/DC 5-valve 3-wave superhet; AC/DC amplifier, 6-8 watts; AC/DC 4-valve t.r.f. medium wave with l.w. conversion.

MANUSCRIPTS containing 5 or 6 pages of drawings, point to point wiring instructions, etc., 5/- each, post free. Theoretical circuit of superhets with price list, 2½d. each.

WELDONA Radio Accessories, Ltd., Swanage. [6665

ARMSTRONG

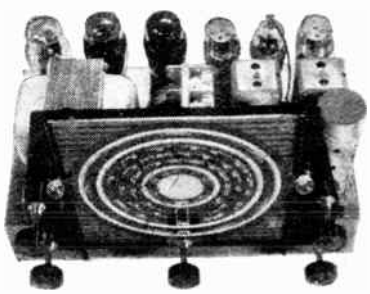

Model 83

As announced last month, we have developed an 8-valve Universal Chassis on the lines of our now popular EXP83. This was in response to many requests for a good quality receiver for use on either D.C. or A.C. mains. This new chassis is our

Model UNI-83

ALL-WAVE 8-VALVE SUPERHET CHASSIS

incorporating wave-band expansion, e.g. the 16-50 m. band covers just over 20 inches on the large glass scale, treble boost control, gram switching, all controls work on both radio and gram, high quality push-pull output giving 6 watts audio. For 200-250 v. D.C. or A.C. mains.

Provisional Price **14 gns.** *plus tax.*

Model EXP83

ALL-WAVE 8-VALVE SUPERHET CHASSIS

incorporating wave band expansion. Large glass scale treble boost control. Gram. switching. High quality push-pull output gives 10 watts audio. For 100-250 v. A.C. mains.

Price **14 gns.** *plus tax*

Model EXP53

ALL-WAVE 7-STAGE RADIOGRAM CHASSIS

This new radiogram chassis incorporates wave-band expansion on all bands. Volume and tone controls work on both Radio and Gram. 4½ watts R.C. coupled output. **Supplied complete with full size loudspeaker.** This chassis has a lively performance, good quality reproduction, and represents excellent value. For 200-250 v. A.C. mains.

Price, with speaker **13 gns.** *plus tax.*

Model EXP43

ALL-WAVE SUPERHET FEEDER UNIT

incorporating wave band expansion manual I.F. gain control, etc.

Price **11 gns.** *plus tax*

● We very much regret that, owing to the continual rise in cost of materials, it may be necessary to increase the above prices slightly by the time this advertisement appears.

Demonstration Sets are now available for interested callers to hear and illustrated technical specifications are now ready.

ARMSTRONG WIRELESS & TELEVISION CO. LTD.
WARLTERS ROAD, HOLLOWAY, LONDON, N.
'Phone : NORth 3213

G. A. RYALL, 65, Nightingale Lane, London, S.W.12. Mail order only. No c.o.d. under £1 please; postages extra. Retailers set manufacturers. Those engaged in radio service work are invited to send for our special list.

SPECIAL value in assorted resistances, new delivery, over 24 sizes, 1watt, ½watt, ¼watt even quantities sent, from 82 to 2meg, 1/6 doz 15/- gross, all best makes; 2watt type, 3/ dozen to clear, sizes, 6,800, 36,000, 43,000 140,000, 150,000, 220,000, 470,000, 82,000 Resistances, ¼watt sizes, 100, 180, 220, 270 1,000, 2,000, 3,000, 4,300, 11,000, 500, 50,000 100,000, 330,000, 470,000, 1 meg, 2 meg 2/6 dozen; also 82 ohms, 1watt, 2/- dozen; 33,000, 3watt, 2/- dozen; 1,800, wire wound, 1/- dozen; and 20 ohm vitreous, 4 - dozen; vitreous 4,700 20watt, with clips, 2/- each; new delivery of best make 0.002 and 0.005 mica condensers, wire ends, 3/- dozen, or 24/- per gross, perfect condition; Mansbridge 4mf high insulation, to clear at 1/3 each, 250v U.S.A. make, 0.1mf 500v tubular metal eased condensers, 5/- dozen; 0.5mf, 3 2/-; 0.002 tubular, wax dipped, 450v, 3/6 doz.; panels, with screened 0.1mf and 12 ½watt resistances, 2/3 ea; panels with pairs of 0.1mf 530v condensers, wax dipped, 4/- per 6 pairs; twin trimmers, 30mm on bar, separate, 3 2/-; Octal plugs with metal caps, with chassis-type sockets, 3 2/6; with solder tags, 3 3/-; valve holders, British 7-pin, U.S.A. 4, 5, 6 pin all 4/- doz; volume controls, less switches, 1 meg short spindle, 1/6; ¼ meg, bakelite cased, slotted for pre-set, 1/6; ¼ meg, metal cased, 1/6; Yaxley type switches, single bank short spindle, 9-way, 2/3; three-bank 4-way, 2 pole, with middle screen, 3/9, post 7d on singles; double phone and mike transformers, secondaries 175.45.10 ohms, 5/- each; power microphones, unused, work direct into loud speaker, 20/- each; a few single type control boxes available, containing 2 Yaxley switches and distribution blocks, etc., new, 2/6 each; c.o.d. only this line. [6653

ALUMINIUM chassis, panels, cabinets, metalwork for the amateur by precision engineers; trade enquiries invited; s.a.e. lists.—G.L.G. Radio, Mordhard Bishop, nr. Crediton.

100 coil packs, Wright & Weaire type 605, at £2/2 each; 100 pairs i.f. transformers, Wright & Weaire type No. 501-502, at 20/- per pair; new, manufactured 1946, in maker's packing.—Melody House, Camborne. [6589

NEW components suitable modern s/het or pre-tuner, also G.12 m.e. 2,500 p.u., etc.; stamp for list.—129, Sutton Rd., Kirkby-in-Ashfield, Notts. [6647

SURPLUS Wire.—Rubber and rubber cotton covered flexes, screened flexes; one to six core insulated bell wires and many others; list and prices.—Mc & B. Heat Control, Ltd., Mill St., Harlow Common, Essex. [6485

NEW boxed STC metal rects., makers' rats. and list prices; 12v O/P 1a 11/1, 1.5a 12/9, 2.5a 16/-, 4a 20/8, 5a 28/6, 8-10a 34/2; post and pack. 1/- over 2.5a; trade supp.—Pearce, 66, Gt. Percy St., W.C.1.

BIG display of Government surplus material offered at fraction of original cost.—Central showrooms situated top of Tottenham Ct. Rd., Norman Rose, Norman House, 53, Hampstead Rd., London, N.W.1. Eus. 6886-7. [6013

U.S.A. volume controls!—5,000 and 1meg with d.p. switch, 5/6; dual 2meg and 50k with switch, 7/6; midget 100k and 200k less switch, 2/-; 1k, 50k, and 75k less switch, 2/6; postage extra.—M.O.S. 24, New Rd., London, E.1. [6553

VORTEXION transformers and chokes, etc., supplied to B.B.C., G.P.O., L.P.T.B.; why not you?; wound to any specification; imitated but unequalled.—Vortexion, Ltd., 257-261, The Broadway, Wimbledon, S.W.19. Tel. Liberty 2814-6128. [4536

LONG and medium Midget superhet, coils mounted with trimmers, padders and switch, etc., boxed with full circuit diagram and instructions; quote Type M1, 22/6; manufacturers' and dealers' enquiries invited.—Douglas Electronic Industries, Ltd., Brinklow, Rugby. [6663

RADIO kits.—4v ac/dc T.R.F. M. and L. wave, complete with valves and speaker, £6; less valves £4; complete kits in lots of 6 £33; less valves £22; 5v ac/dc superhet kits, complete with valves and speaker, £8; cabinets extra.—Cook, Old Barn Rd., Christchurch, Hants. [6660

POWER packs by Philips or Pye, wonderful offer of ex-Government stock, complete with mains lead, spare fuses and pilot lamps, for a.c. 100-250volts, 40-100cycles, output 12volts a.c., 6volts a.c., 275volts d.c., rectifier valve OZ4 cold cathode or 6×5G indirectly heated cathode, size of case 6×8×10in.—1,000 only at 42/-, carriage 4/-, from Gamages, Holborn, E.C.1. [6659

World Radio History

Cabinets by Lockwood

Once again we can make a limited quantity of Radiogram Cabinets, at first only for manufacturers holding a timber permit, but soon we hope to deal with some of the many individual enquiries received.
Our first model will be suitable for housing a large receiver, amplifier and speaker, also record changer, and we shall continue to alter our standard design to suit individual requirements, where necessary.
We believe this cabinet to be exclusive and with acoustic features not found in ordinary commercial cabinets. Like all good things it will be expensive, but we would rather produce something good or not manufacture at all.
We shall be pleased to place your name on our lists for details as soon as these are available.

Lockwood

& COMPANY

67, Lowlands Road, Harrow, Mdx.

Phone : BYRon 3704

Aladdin RADIO CORES

for all purposes

GREENFORD, MIDDx. WAXLOW 2300

THESE ARE IN STOCK

Time Bases, by O. S. Puckle, **16s.** Postage 5d.

Electronics for Engineers, Markus & Zeluff, **30s.** Postage 8d.

Testing Radio Sets, by J. H. Reyner, **15s.** Postage 6d.

Practical Wireless Circuits, by F. J. Camm, **6s.** Postage 4d.

Problems in Radio Engineering, by E. T. Rapson, **5s.** Postage 4d.

The Practical Wireless Encyclopaedia, by F. J. Camm, **10s. 6d.** Postage 6d.

Short Wave Radio, by J. H. Reyner, **10s. 6d.** Postage 4d.

Pulsed Linear Networks, by Ernest Frank, **15s.** Postage 7d.

The "Wireless World" Valve Data, 2s. Postage 2d.

An Introduction to the Theory and Design of Electric Wave Filters, by F. Scowen, **15s.** Postage 4d.

WE HAVE THE FINEST STOCK OF BRITISH AND AMERICAN RADIO BOOKS. WRITE OR CALL FOR COMPLETE LIST.

THE MODERN BOOK CO.

(Dept. W.18), 19-21, PRAED STREET, LONDON, W.2

COILS, high gain t.r.f. combined med. and long wave, 2¾in long, a really first-class job; aerial and h.f. 7/- pair post paid, 2-colour station scale, 1/3.—Aneloy Radio (new and spacious showrooms), 15, Upland Rd., E. Dulwich, London, S.E.22. [6301

OSMOR Radio Heart equals complete first class 5-valve superhet, positively only small condensers and resistances to find, super efficient components, building instructions; £5/16; cabinets; trade invited.—Morgan Osborne, Ltd., Southview Rd., Upper Warlingham 2560, Surrey. [6226

EAST Anglian Hams.—Components for transmitters, receivers, etc., in stock; agents for Hamrad, Raymart, Eddystone, Labgear; if you cannot call send your order by post; delivery against cash with order or c.o.d.; s.a.e. with all enquiries.—Newson, G3GY ex-G2GF, 28, Market Place, N. Walsham, Norfolk. Tel. 219. [6550

SELECT RADIO, 151, Ley St., Ilford, Essex. Tel. Ill. 2685, for component parts, line cord, 700hms per ft., 3-way, 17/- doz yds; heavy duty U.S. or Mazda valve holders, octal, 4/- doz; .3 droppers with feet, 3/9; all other component parts in stock; send s.a.e. for list 2½d, send 6d extra postage and packing; no c.o.d.; see last month's advert. [6640

MAINS transformers, first grade and brand new, still the finest value in the trade: 350-0-350 80mA. 4v 4a and 4v 2.5a, or 6.3v 3a and 5v 2a, 22/6, post 1/-; 120mA type, 6.3v tapped, 4v and 5v tapped 4v, 27/6, post 1/-. Similar quality 30w output, multi-ratio 20/, post 1/-; s.a.e. for list of other bargains. —Aneloy Radio (new and spacious showrooms), 15, Upland Rd., E. Dulwich, London, S.E.22.

SANGAMO synchronous motors, self-starting, exceptionally good torque, rotor speed 200 r.p.m., 200-250v ac. 50c, consumption 2½ watts, size 2¾×2, geared 1 rev 60 min, can be reset to zero by friction drive from front or back, shaft ⅝in × 1/10, to run clockwise, ideal movements for making electric clocks, time switches, etc., nickel plated finish; price 22/6 each.

12 TO 1 dial trains to fit above spindle; per set, 2/6

MAKE your own dark room clock.—Sangamo synchronous motor, self-starting, 200-250 ac, 50c, geared 1 rev. 60 seconds, can be reset to zero by friction drive from front or back, shaft ⅝in × 1/10, to run clockwise; 22/6 each.

15AMP mercury switches, enclosed bakelite tubular cases, 2½in×¾in, fitted swivel saddle, connector block, etc.; 5/6 each.

CASH with order post paid on all above goods.

TO callers only.—A comprehensive stock of scientific instruments, meters, gears, relays.

H. FRANKS, Scientific Stores, 58, New Oxford St., London, W.C.1. Tel. Museum 9594.

HARRY JAMES PRODUCTIONS, 270, Leith Walk, Edinburgh, 6. Mail order only, c.o.d. or cash with order. Condensers: 8mfds 500v, 2/10; 8+8mfds, 5/6; 16mfds, 4/9; 0.1mfd 500v 7d, 0.05 6d. Volume controls; WS ¼ and ½ meg, 4/6. Valve holders 5, 7 pin and octal 6d each. Dropper resistances with feet, 0.2 and 0.3 amp, 4/6. English and American valves in stock at list prices. Give us your enquiries. [6669

TRANSFORMERS for every purpose, highest grade workmanship, competitive prices, immediate delivery; microphone, inter valve and P.P. driver trans, O.P. trans, 1 to 60 watts; chokes, all sizes, fluorescent, light chokes; mains trans to 2kva auto-trans, 60va to 2kva (200-230v, 115v and 24v at max. current); test gear trans for bridges, oscilloscopes, valve testers, etc.; list 1d.—Radio Services, Field St Works, Blackpool. Tel. 1250. [5602

COPPER wire, large stocks, enquiries invited; cotton covered ¼lb reels, 18, 20, 22, 24g, 1/6; 26, 28g, 1/9; 30, 32g, 2/-; 34g, 2/3; enamelled, same prices, including 36g, 2/3; 38, 40g, 2/6; silk covered, 16g, 1lb 5/-; 18g, 1lb 7/-; 22g, ¼lb 2/6; 2oz reels, 24, 26, 28g, 1/6; 30, 32, 34, 36g, 1/9; 38, 40g, 2/-; 42g, 2/3; 44, 45g, 1oz 2/-. Laminated bakelite panels, ⅛in thick, 6in×4in, 1/3; 6in×6in, 1/9; 8in×6in, 2/3; 10in×6in, 2/9; 10in×8in, 3/6; 12in×8in, 4/-; ditto, 1/16in thick, same sizes, 10d, 1/2, 1/6, 1/10, 2/4, 2/8; polished ebonite panels, 3/16in thick, sizes as above, 1/9, 2/9, 3/6, 4/6, 6/-, 7/-; B.A. screws, gross useful sizes, 2/6; ditto, nuts, 2/6 gr.; assorted gross screws and nuts, 2/6; brass washers, 1/6 gr; fibre washers, 1/6 gr; assorted soldering tags, 2/- gr; assorted small eyelets and rivets, 1/3 gr; quality stranded and single push-back wire, 12 yds 2/3; resin-cored solder, ¼lb 1/-; new ex-G.P.O. hand telephones with microphone, switch and cord, 12/6; used ex-R.A.F. low resistance earphone with switch, bargain, 2/6; all postage extra; trade supplied.—Post Radio Supplies, 33, Bourne Gdns., London, E.4. [6623

BAKERS 'Selhurst' RADIO

18" and 12" P.M. QUALITY SPEAKERS

8 and 15 WATT AMPLIFIERS

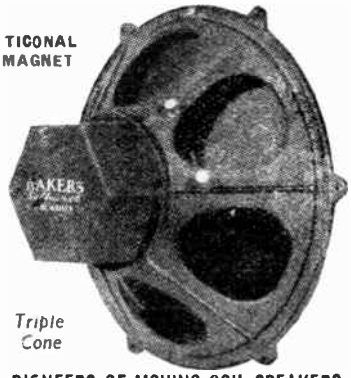

PIONEERS OF MOVING COIL SPEAKERS

Improved 1946 MODELS available.

CINEMA Model - - - - £8 19 6
AUDITORIUM Model - - - £5 18 6

Send 2½d. stamp for Illustrated List to:

BAKERS 'SELHURST' RADIO

75-77 Sussex Road, South Croydon, Surrey

Telephone : CROydon 4226.

THE COIL PICKUP

of all metal construction

IS IDEAL FOR TROPICAL USE

WILKINS & WRIGHT LTD.,

"Utility Works," Holyhead Road, BIRMINGHAM, 21.

AMATEUR CRYSTALS IN MINIATURE

.02% calibration accuracy. 2 in 1 million 1% temperature coefficient.

7 megacycles ..... **27/6** each.
14 megacycles ..... **35/-** each.

Hermetically sealed in glass button based envelop standard B7G base.

(Small stocks at present, but delivery improving)

AMERICAN VALVES (NEW)

Button Base, Acorn, Metal and G.T. types. Available from Stock.

9001, 9002, 9003. **15/-** ea. 6AG5, 6AK5, 6C4, 6J6, **15/-** ea. 955, **25/-**. 956, **35/-**. 0Z4, **15/3**. 6SK7, 6SJ7, 6SG7 **12/10** ea. 6AC7/1852, **21/4**. 6AG7, **21/4**. 6C5, 6J5. **9/2** ea. 6H6, **6/9**. 6F6, 6L7 6K6, **12/10** ea. 6SA7 **14/-**. 6E5, **15/-**. 6L6, 6SN7, 6SL7, 6SC7, **18/3** ea. 12SK7 12SJ7, 12SG7, 12A6, **12/10** ea. 12K8, **14/-**.

International Octal Bases (Ceramic), **2/6**. R.C.A. Button Bases for 9001, 6AK5 etc. (Ceramic), **1/6**. Button Bases with shield cans, **3/-**. American Acorn Bases (Ceramic), **2/-**. American Loktal Bases (Bakelite), **1/-**. EF50 Bases Ceramic or siliconised polystyrene, **3/-**.

TELE-RADIO (1943) LTD.

177, Edgware Road, London, W.2

Telephone : PADdington 6116

PLEASE NOTE : Above is our only address—we are in no way associated with any other company of similar name.

World Radio History

MIDGET superhet kits, complete with five A.T. valves, line cord, electrolytics, all coils, etc., only £10 each; bargain parcels at £1 or £3, £5 and £10, money refunded if not delighted; Acorns, triodes 25/-, pens 35/-; meters, moving coil, 2in, 5ma, 40/-, 10ma 35/-, 25ma 30/-, 40+120ma 35/-; steel cases, black crackle, 12/6 and 7/6; send s.a.e. for list; more bargains for callers.—Brown, 63, Salisbury Av., Farnham Rd., Slough, Bucks.

LIMITED quantity ex-R.A.F. throat microphones, 5/11 pair, post free; G.P.O. jack plugs, 6d each, post free; rev counters (0 to 1,000), 1/- each, post free; new 4-way flexible telephone leads, tagged ends, 2yds long, 6d. each, postage 2d., 5/- per doz.; new 2ft twin leads, tagged ends, 1/- doz., postage 4d.; Government surplus, headphone with head-band, 2/6, post free; Post Office type carbon microphones (as new), 2/6 ea., post free.—Hay & Son, 129, North St., Brighton. [6568

ELECTROLYTICS 500v working, 8mfd 2/10. 8×8mfd 5/6. 16mfd 4/9; mains transformers 500-0-500, 200ma, 6.3v 4a, 6.3v 2½a, 5v 3a, 45/-; 350-0-350 80ma, 6.3v 3a, 5v 2½a, 4v 4a, 4v 2½a, 32/6; vibrator units 2v input 180v output, L.T. and G.B., easily adaptable for any use, with 2 accumulators, £4; 102in telescopic aerials, 17/6; ex-R.A.F. "Identification Friend or Foe" receiving and transmitting units, complete with valves and containing components worth over £20, a few only, 75/-; s.a.e. for component lists.—U.E.I. Corp., 32, St. Gabriel's Rd., London, N.W.2. [6296

SELENIUM metal rectifiers, charger kits, rectifier conversions, all new goods, no surplus stocks; selenium metal rectifiers, latest type, with circuit diagram and interesting "Notes," 12v 3 amp type, 21/-, post 8d.; 12v 2 amp, 15/-; 12v 1.5 amp, 10/6, post 6d; 12v 4 amp, 27/6; 12v 5 amp, 32/6, post 9d.; selenium type h.t. rectifiers, 250v 60 ma, for ac/dc receivers, 12/6, post 6d; 120v 20 ma, for eliminators, 7/3, post 4d; also a range of rectifiers for converting valve type chargers to metal rectification, from stock; instrument rectifiers, 1 ma and 5 ma, 12/6; 2 mfds 1,000v condensers, 7/6; guaranteed charger kits, metal rectifier, 12v 3 amp type, with 50 watt transformer and ballast bulb for 2v to 12v charger, 47/6, post 1/-; ditto 12v 2 amp, 38/6; ditto 1.5 amp, 35/6; ditto 2v, 6v only at 2 amp, 32/6, post 10d. METAL rectifier, 12v 4 amp type, with 75 watt transformer and ballast bulb for 2v to 12v charger, £3, post 1/-; metal rectifier, 12v 5 amp type, with 120 watt transformer for 6v, 12v charger, weight 12lb, £4; trickle charger rectifier, 2v 0.5 amp, with transformer, makes ideal trickle charger for 2v cell, 13/6, post 7d.

SMALL commercial type charger kits, transformer, rectifier, ballast bulb for 1 to 20 cells in series at one amp, £5/5; ditto 2 circuit type, 1 to 20 cells at 2 amps, £7/5, handles up to 80 cells per week; eliminator kit, trans former, metal rectifier, two 8mfds condensers, for 120v 20 ma eliminator, 35/-; ditto with 2v 0.4 amp trickle charging, 39/6, post 8d.

CHAMPION, 43, Uplands Way, London, N.21. Tel. Lab. 4457. [6656

ROTARY transformers, brand new, ex-Govt. stock, with 6v input, output 200v at 50ma continuous, or 150v at 80ma up to 3 hours, with 12v input, output 480v at 40ma continuous or 400v at 80ma up to 3 hours, size, length 7½in, height 3¾in, weight 6¼lb. original price £7/7, each 25/-; midget m. wave t.r.f. coils, high gain, 5/-; m.l. wave, with reaction, circuit, 7/6; m.l. wave, iron cored, adjustable cores, circuit, 10/6; s.m.l. aer. and osc. coils, circuit, 10/6; Weymouth midget i.f.s., iron core, 465kcs, per pr., 19/6, standard i.f.s., 465kcs, per pr., 15/-; Weymouth all-wave coil pack, 38/6; coloured ivorine dials, s.m.l. wave, 4×3½in, 2/-; 5×5½in. 2/6; 6×5in, m.l. wave, 1/6; slow motion drum drive, 3/-; epicycle drives, 3/3; Rothermel Senior peizo crystal pick-ups, 56/3; midget cabinets, green and cream, 13in×7in×6in. 40/-; amplifier cases, undrilled with perforated cover, 17½in×8½in×9½in, 35/-; tubular electrolytics, 8mfd 150v 2/6, 200mfd 12v 2/-; miniature rotary switches 4p 3w, 4/-; chokes, midget 50ma, 5/6; standard 80ma, 8/6; heavy 150ma, 12/6; Simplex chassis, 11×4½×2in, at 6/-; W5V chassis for coil packs, 11½×5½×2½in, at 6/6; all chassis with 6in speaker cut-out and fully drilled all component holes; nuts-screws, 6 BA, 4 BA, per gross (2 gross in all), 6/-; heavy duty output P.P. trans, 6.600, A to A load, tapped output, 7.5 and 15ohms, each 21/-; monthly comprehensive lists, well worth having, 2½d stamp; postage all orders.

O. GREENLICK, Ltd., 34, Bancroft Rd., Cambridge Heath Rd., London, E.1. Tel. Stepney Green 1334. [6463

LONDON CENTRAL RADIO STORES

EX-R.A.F. R1155 COMMUNICATION RECEIVERS

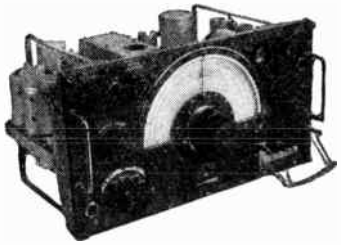

These sets are equal to new, need only a power pack for immediate use (see "W.W.," July, 1946). Freq. range, 7.5 mcs. to 1,500 kcs., complete with 10 valves, including magic eye. Enclosed in strong metal box. Each receiver is aerial tested. **15 Gns.**

POWER PACK 220-250 v. AC for above is available to CALLERS ONLY.

EX-ARMY No. 58 Mk. 1 Self-contained 8 v. Short Wave TRANS-RECEIVER

Frequency Range 6-9 mc/s with Rod Aerials, Panel Test Meter, 8 Valves, Wire, etc. **£6.10**

PORTABLE UNIVERSAL AMPLIFIERS

200-250 volt input, 5 valves, P-pull output. 6-8 watts in Rexine covered carrying case. Complete with mike and floor stand, loudspeaker, etc., size when closed 13in. × 15in. × 10½in. Bargain offer **£19.10**

EX-GOVT. HEADPHONES with Microphone on metal desk-stand. Self-energising. No battery or excitation needed, 2 Complete Sets for intercom. **55/-**

EX-GOVT. HIGH SPEED RELAY

with platinum contacts, D.C. resistance of coil 500 ohms., enclosed in dustproof brass box, size 3in. × 1¾in. × 1in. New **6/6**

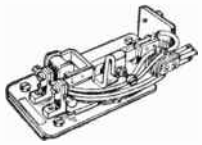

SMALL FRACTIONAL H.P. MOTORS. 24v. DC/AC Universal and Reversible. Weight 20 ozs. Size 2¾ × 2¾ × 2in. **19/6**

D.C. MICROAMMETER, central zero 0-100. 4in. Dial panel mounting..... **£3.0.0**

MOVING COIL MICROPHONE INSERTS DC res. 30 ohms. ..... **5/-** each

SINGLE ALUMINIUM TUNING CONDENSERS. Cap., .00045. ¼in. spindle **4/6**

12 VOLT VIBRATORS, 4 pin UX base. New **9/6**

HAND MICROPHONES. Ex-Govt. By Tannoy and Truvox. Heavy-dutymulti carbon type, heavy metal case, with on/off switch in handle .. **£1.0.0**

P.M. LOUDSPEAKERS. New 8in. with output transformer **27/6**

EX-ARMY REFLECTOR TYPE P.M. LOUDSPEAKERS

By Tannoy and Truvox. Suitable for small P.A. work, factories, etc. Voice Coil 7.5 ohms. A robust job in heavy wooden case, 9in. × 9in. × 7in. Bargain price

£2 . 17 . 6

TO CALLERS

We have a varied selection of Meters, Microphones, Amplifiers, Radar and Ex-Government Radio and Electrical equipment.

23 LISLE ST. (GERrard 2969) LONDON, W.C.2

USE the best components in your Weymouth receiver, we can supply them. Summersby i.f. transformers, Litz wound permeability tuned, high Q, 15/- per pair; Weymouth coil pack, 2-gang condensers, from 10/-; 8in speakers with transformers, 25/-; special high fidelity 8in speakers, with transformers, 35/-; Weymouth constructional diagrams, 2/6 per set; 3-wave dials, 3/6; Electrolytic condensers, 8mfd 3/-, 16mfd 4/6; condensers of all values, resistors of all values, t.r.f. coils, etc.; immediate delivery.—Castle Radio, 101, Poverest Rd., Orpington, Kent. [6629

RELAYS.—Unrepeatable offer of new, boxed Post Office type relays, at a fraction of cost price; type A, coil 500 ohms, contacts 1 changeover, 1 make, 3/- each; type B, coil 200 ohms, with slug, 1 changeover, 1 break, 3/- each; type C, coil 200 ohms, with slug, 1 changeover, 1 make, 3/- each; type D, all sold; type E, two independent windings, 500 and 1,000 ohms, 2 makes, 1 change over, 4/- each; type F, coils 500 and 1,000 ohms, 3 makes, 1 break, 4/- each; type G, thermal delay unit, 100 ohms, 1 changeover, 2/- each; type H, special high sensitivity, coil 10,000 ohms, 1 adjustable changeover, 6/- each; a few are available with coils as type A, B or E, and contacts as H, 3/- each; also with coils as H, and contacts as A, B, E or F, 6/- each; send s.a.e. for descriptive leaflet; minimum order £1 post free, no c.o.d.—BM/RXBF, London, W.C.1. [6571

FENWICK for aluminium panels, 18in×8in. 14 gauge 4/-, 18in×12in 4/6, 18in×8in 3/-, 18in×6in 2/6, 18 gauge, post paid. Speaker gauze, 6in sq. 1/3, 12in 2/9, 18in 4/3, Perspex 18in×13½in×3/16in 21/-, or half size 10/6. Westinghouse instrument rectifiers 1 or 5mA 10/6, also H.T. and L.T. units. Weymouth A/wave S/H coil packs 38/6, or coils only 11/6 pr. miniature I.Fs, 465 k/cs. 19/6 pr., M/L TRF coils with reaction 9/6 pr., circuits included postage 6d. extra; J.B. 0.0005 twin gang 13/6. Huge stocks of valves, enquiries invited Eddystone appointed agents. Pickups, trans formers, chokes, mikes, linecord, speakers, 2½in to 12in; we carry the largest and most varied stocks of components in the Midlands. Circuits 8d. each, 2v A.C., 5v A.C. S/H, multirange testmeter. Radio Reference Handbook, 13/- Whatever your radio requirements write to Fenwick, Dept. P., Gt. Brickkiln St., and Snowhill, Wolverhampton. [6241

RADIO CLEARANCE, Ltd., 27, Tottenham Ct Rd., W.1. Mus. 9188.—Mains trans., 350-0-350v, 80ma, 6.3v 3a, 5v 2a, 21/-; P.M. speakers, all well-known makes, 2½in 25/-, 3½in 25/-, 8in, with trans., 30/-; 8in, less trans., 25/-; 10in, with trans., 42/6; less trans., 40/-; tuning condensers, 2-gang, 0.00035 short spindle, 6/11; 0.0005, 3 gang, 7/6; superhet. coils, M.W., A.E. and M.W. osc., L.W. A.E., L.W. osc., 2/6 each; former size ½in × 1¾in; iron-cored 465 kc/s trap, 2/9; set of 5 coils, 11/6; volume controls with switch, 10K, 50K, 100K, 500K, 1M 4/6; less switch, 10K, 20K, 50K, 100K, 2M 2/6; miniature 1K, 20K, 100K, 250K, 500K, 2/-; wirewound, ·3w, 100Ω, 200Ω, 500Ω, 1K, 2K, 3K, 5K, 10K, 20K, 2/6; electrolytics, 8mf 500v can, 3/3; 20mf 50v, 1/9; 250mf 25v, 2/-; Mansbridge condensers, 1mf 350v, 9d.; 1mf 1,000v, 1/3; 2mf 300v, 1/-; 4mf 600v, 4/6; 4mf 1,500v, 5/-; all wkg. v; switches, 1p 3w, 1/9; 1p 12w, 3/-; 2p 4w, 2/9; 4p 3w, 3/-; tubular conds., 0.001, 0.002, 0.005, 0.01, 0.02, 0.05, 6d; 0.1 350v, 7d.; 0.1 500v, 9d.; mica conds., 0·0001-0.0005, 4d.; 0.001-0.005, 5d.; 0.01, 6d.; silver micas, 5pf to 6.000mf, 6d.; resistors, ¼w 3d., ½w 4d, 1w 6d, 2w 10d, 3w 1/3; all valves; 3w wire-wound, 5Ω, 45Ω, 470Ω, 3.9K, 6.8K, 47K, 1/-; vitreous, 10w, 50Ω, 250Ω, 500Ω, 1K, 1/6; 20w with clips, 120Ω, 200Ω, 2K, 8K, 2/-; 25w, 350Ω, 5K, 2/6; 40w, 14K, tapped at 2K, 3/-; ceramic conds, 2pf, 10pf, 20pf, 50pf, 100pf, 6d.; Bakerlised tubular condensers, 0.17 250v, 3d; 0.1 600v, 6d; 0.5 400v, 6d; 100mfd 12v electrolytic, 1/-; Ally chassis, part drilled, 10½in ×10½in×2¼in, 3/6; mains droppers, 0.3a, 800Ω, with 2 sliders, 4/-; H.F. chokes, 1/6; ceramic trimmers, 1-15pf or 3-50pf, 9d; padders, 600pf, 1/-; valve holders, 4-pin Brit., 1d; Amph 5-pin Brit., 4-pin UX, Mazda or Int. octal, 6d; ceramic 5-pin UX, 7-pin UX, EF50, 1/6; television line trans., 12/-; flat 10w P.O. type res., 350Ω, 1K, 2K, 4K, 1/-; screened wire, rubber ins., single 8d, VD stranded. [6655

MISCELLANEOUS

TIME Recorders.—Write for particulars.—Gledhill Brook Time Recorders, Ltd., 84, Empire Works, Huddersfield. [2419

CHASSIS and panels in aluminium from 3/9 each; immediate delivery, any size plain or punched, for valveholders, etc.—Mead, 13, Bence Lane, Darton, Barnsley. [6575

World Radio History

M. WILSON LTD

To all readers
we send
Greetings
and our
Best Wishes
for the
New Year

307, HIGH HOLBORN,
LONDON W.C.1. *Phone: HOLborn 4631*

WE APOLOGISE to those who have been waiting months for replies. Our post-war plans have been frustrated so far. Sorry!

Be WISE and PATIENT

VOIGT PATENTS LTD.

SERVICING AND EXPERIMENTING

U.H.F. Wave Meter and Oscillator

Laboratory instrument made originally for testing Services' Radar sets. Comprising absorption type wave meter with separate oscillator both of variable frequency, variable between 150 and 220 mega-cycles. Mains operated and complete in copper-lined instrument case with removable lid and hand calibrated chart. Services' reference number, W1310. **£8 8s.** each.

Sensitive Coil Tester

"Every progressive firm which makes or tests coils will have one of these instruments before very long" is what a prominent American firm said when they received this coil tester.

Coils can be tested for short circuits and for open circuits almost as fast as they can be picked up, and by an inexperienced operator. A positive indication is given even where only one turn is short circuited. Mains operated. Meter indication. **£12 12s.** each

List of Spares and Instruments

Our list details over one thousand instruments and spare parts. Servicemen and experimenters are invited to send for a copy.

V.S. CO.,
RADIO HOUSE, RUISLIP, MIDDLESEX

SPARKS' data sheets offer the widest range of tested and guaranteed designs, in full-size data sheet form, obtainable in this country.

TINY Two, just released, a 2-valve all-dry self-contained portable, med. waves.

DESIGNED for individual listening to local stations on speaker, size 5¾×5½×5¼in. 18-volt HT; 2/6.

THREE-valve all-dry portable, m/l waves, 9×6×4in, a most popular set; 2/6 Send a stamp for full list (W).

SPARKS' Data Sheets (W), 9, Phoebeth Rd., Brockley, S.E.4. Tel. Lee Green 0220. [6509

ELECTRIC open and tubular heaters, etc., supplied to stores and shops.—Write, Matthias Rivlin, 69, Albion St., Leeds. 1. Tel. 25972. [5947

CIRCUIT diagrams (individual designs) to order; technical points explained; chassis assembled from parts supplied (London area). —R. G. Young, 3a, Bridges Rd., Wimbledon.

MATHEW Bros. offer very large quantity, brand new, Tiny Tim 12v 20 amp petrol charging sets, in maker's boxes; £25 each, plus 10/- carriage; reduction for quantities. MATBRO Works, Sandy Lane North, Wallington. Tel. Wallington 4050. [6341

AN exhibition of plant, materials and equipment will be held by the Relay Services Association of Great Britain, in conunction with its Associate Members in London, during May, 1947, manufacturers of receivers, amplifiers, loudspeakers and their component parts and of test and measuring instruments used in conjunction therewith, desiring to exhibit are invited to write within 14 days to: The Secretary, Relay Services Association of Great Britain, 25, High St., Tunbridge Wells, Kent. [6671

WANTED, EXCHANGE, ETC.

WANTED, radiogram cabinet, any style.—Particulars to Box 3037. [6171

ANY number service sheets required.—Price and condition to Box 5039. [6618

SERVICE sheets, all makes, from 1936.—Condition and price to Box 1860. [5855

MULLARD PM3D and PM24X wanted.—H. L., 42, North Cres., Finchley, N.3.

GOODMAN'S infinite-baffle speaker wanted. —7, Cranbourne Rd., Manchester, 21.

HARTLEY-TURNER 12watt amplifier.—Jones, St. Aubins, Devonshire Rd., S.W.19.

ROLA G.12 speaker required, new or second-hand.—Offers should be sent to Box 4977.

WANTED, service sheets, all makes, 1936 onwards; highest price paid.—Box 5126.

WTD., magnetic scanning and focus coils.—Hillcrest, Beehive Lane, Chelmsford. [6648

AVO all-wave batt. osc., £13; ½hp d.c. motor, £5; want Uni Avominor.—Box 5041. [6620

WANTED, "W.W.," May, August, December, 1940; February, 1941.—G. Mobbs, 20, Perrymead St., Fulham, S.W.6. [6543

WE offer cash for good modern communication and all-wave receivers.—A.C.S. Radio, 44, Widmore Rd., Bromley, Kent.

WTD. for cash, Quality meters, Westons, Avos, etc, cond. unimportant; exchanges, sales, repairs.—BCM/METERS, London, W.C.1.

REQUIRED, valves, types 6K7, 6J7, 6SK7, 6SJ7, 6Q7, 6SQ7, 6F6, 6V6; state quantities and prices.—Enham, Old Barn Rd., Christchurch, Hants. [6661

WANTED, Cossor ganging oscillator; 24v motor genny giving 1,250v 240mA, and 6v or 24v receiver-type vibrator unit.—Crampin, High St., Waltham. (Tel. 2265.) [6566

G. W. SMITH & Co (RADIO), Ltd., require the following: new or second-hand radio receivers and radiograms; all classes of radio test equipment; highest cash prices paid. G. W. SMITH & Co. (RADIO), Ltd., 2, Cecil Rd., Southgate, London, N.14. Tel. Enterprise 5465. [5116

WANTED, 1,000 cycle single phase dc/ac rotary converter, input 200-230 volts dc. output not less than 20 watts at any normal voltage; would consider an alternator as alternative.—Box 4896. [6558

WE buy for cash, new, used, radio, electrical equipment, all types; especially wanted, radios, radiograms, test equipment, motors, chargers, recording gear, etc.—If you want to sell at the maximum price, call, write or 'phone to University Radio, Ltd., 22, Lisle St., Leicester Sq., W.C.2. Ger. 4447.

WANTED for export, supplies of small (midget) size radio sets suitable for all Africa, Palestine, Egypt, India, Ceylon, Burma, Malaya, Hong Kong; five valve, superhetrodine, three wave bands, tropicalised, ac/dc, size about 9in × 7in × 6in; price about £8, in cartons.—Box 552, c/o Pool's, Aldwych House, London, W.C.2. [6590

REPAIRS AND SERVICE

LOUDSPEAKER repairs, British, American any make; moderate prices.—Sinclair Speakers, 12, Pembroke St., London, N.1. Terminus 4355. [3308

Specialists in

HIGH POWER - HIGH QUALITY
PUBLIC ADDRESS SYSTEMS
★
AMPLIFIERS
from 150 W to 1kW

W. Bryan Savage Ltd
WESTMORELAND ROAD, LONDON, N.W.9
Telephone: Colindale 7131

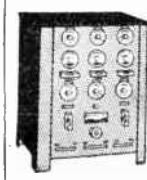

BATTERY CHARGERS and TRICKLE CHARGERS

Trouble-free Chargers fitted with selenium all-metal rectification. Good allowance on your old Charger. Thirty years experience behind every Runbaken product. Booklet R.15 describing 12 Models on request.

RUNBAKEN MANCHESTER 1

C.C.C.
QUARTZ CRYSTAL UNITS
FOR AMATEURS
For your TRANSMITTER
HIGHER ACCURACY
COMPETITIVE PRICES
Delivery FROM STOCK
For your FREQUENCY STANDARD

SALFORD ELECTRICAL INSTRUMENTS LTD.
PEEL WORKS, SALFORD 3
Proprietors: THE GENERAL ELECTRIC Co. Ltd., of England

World Radio History

THE "FLUXITE QUINS" AT WORK

"Don't worry. There's no need to bawl.
I feel none the worse for the fall.
The Aerial's all right
Fixed tight with FLUXITE
Pity ivy isn't on all!"

●

See that FLUXITE is always by you — in the house — garage — workshop — wherever speedy soldering is needed. Used for over 30 years in Government works and by leading engineers and manufacturers. Of all Ironmongers—in tins, 10d., 1/6 & 3/-.

●

Ask to see the FLUXITE POCKET BLOW LAMP. price 2/6.

●

TO CYCLISTS! Your wheels will NOT keep round and true unless the spokes are tied with fine wire at the crossings AND SOLDERED. This makes a much stronger wheel. It's simple—with FLUXITE—but IMPORTANT.

●

The FLUXITE GUN puts FLUXITE where you want it by a simple pressure. Price 1/6, or filled. 2/6.

ALL MECHANICS *WILL* HAVE

FLUXITE

IT SIMPLIFIES *ALL* SOLDERING

Write for Book on the ART OF "SOFT" SOLDERING and for Leaflets on CASE-HARDENING STEEL and TEMPERING TOOLS with FLUXITE. Price 1d. each.

FLUXITE LTD.
(Dept. W.W.), Bermondsey Street, S.E.1

MAINS transformers rewound, new transformers to any specification.
MOTOR rewinds and complete overhauls; first-class workmanship, fully guaranteed.
F. M. ELECTRIC Co., Ltd., Potters Bldgs., Warser Gate, Nottingham. Est 1917. Tel. 3855.

MAINS transformer rewound and constructed to any specification; prompt delivery.—Brown, 3, Bede Burn Rd., Jarrow. [3460

WE magnetise P.M. speaker units for the trade, large or small quantities, present delivery within 7 days; consult us with your magnetising problems.
A. J. PRATT & SONS, Ltd., 7, Woodbridge St., London, E.C.1. [6419

REWINDS and conversions to mains and output transformers, fields, etc., from 4/6; pp equipment a speciality.—N.L. Rewinds, 4, Brecknock Rd., N.7. Tel. Arnold 3390. [6283

ELECTRICAL measuring instruments skilfully repaired and recalibrated, immediate delivery.—Electrical Instrument Repair Service, 329, Kilburn Lane, London, W.9.

REPAIRS to moving coil speaker, cones, coils fitted, field rewound or altered; speaker transformers, clock coils rewound, guaranteed satisfaction, prompt service.
L.S. REPAIR SERVICE, 49, Trinity Rd., Upper Tooting, London, S.W.17. [4819

TRANSFORMER rewinding, all types power, television & output, pick-ups repaired; prompt service; write for trade list.—North West Electrical Co., 21a, Goldhurst Terr., N.W.6

"SERVICE with a Smile."—Repairers of all types of British and American receivers; coil rewinds; American valves, spares, line cord.—F.R.I., Ltd., 22, Howland St., W.1. Museum 5675. [1575

COIL specialists.—Tuning and oscillator coils, i.f. transformers, etc., rewound or wound to specification.—Electronic Services (R.T.R.A. Service Section), 17, Arwenack St., Falmouth, Cornwall. [6586

STURDY rewinds, mains transformers, chokes and fields; we give prompt delivery and guarantee satisfaction; 14 years' experience; prices on request.—Sturdy Electric Co., Ltd., Dipton, Newcastle-on-Tyne. [4316

LOUDSPEAKER repairs, any make, reasonable prices, prompt delivery, to the trade and quality fans; 25 years' combined experience with Rola, Magnavox, Goodmans, Celestion.—Sound Service Radio, 80, Richmond Rd., Kingston-on-Thames. Kin. 8008. [4977

REWINDS, mains transformers, speaker, field coil-chokes, high-grade workmanship, 7-day delivery; new transformers constructed to customers' specification, singly or in quantities.—Metropolitan Radio Service Co., 1021, Finchley Rd., N.W.11. Speedwell 3000. [3719

24-HOUR service, 6 months' guarantee, any transformer rewind, mains outputs and i.f.s., etc., all types of new transf., etc., supplied to specification; business heading or service card for trade prices.—Majestic Winding Co., 180, Windham Rd., Bournemouth.

LOUDSPEAKER repairs. — A.W.F. give prompt service on most types of loud speakers and horn units, at reasonable charges, to the trade.—Don't write, send complete speakers and horn units only to A.W.F Radio Products, Borough Mills, Bradford Yorks Tel. 11926. [5455

TRANSFORMERS, chokes, etc., rewound, quick service; any type of transformer constructed to specification, any type of fitting or mounting supplied; for all types of winding consult: Radio & Transformer Services, 570, Manchester Rd., Hollinwood, Lancs. Tel. Fai. 2507. [6573

REWINDS, mains transformers, layer wound wax impregnated, O/P transformers, chokes, fields, clock coils, pick-ups, fractional hp motors, competitive prices; prompt delivery; guaranteed work.—W. Groves, Manufacturing Electrical Engineer, 154, Ickneld Port Rd., Birmingham, 16. [4547

ALL makes and kinds of electrical and radio measuring instruments repaired by skilled technicians. A.I.D. approved; all work quoted by return without charge. Also for sale, large variety of voltmeters, ammeters, milli-ammeters, 2in and 2½in dial, reconditioned ex-Air Ministry stock.—W. O. Prescott, Ltd., Dept. D., 29-31, Cowcross St., E.C.1. Tel. Cle. 6783. [6205

TRANSFORMER rewinds, trans. replacement coils, machine layer wound on bakelite former, interleaved, impregnated and clearly marked; rewinds £1, standard windings to 70watts, coils 15/6; extra secondaries and larger types pro rata; new transformers or chokes to specification singly or in quantity; trade list on application; delivery by return of post most types; state model and iron sizes when ordering coils, pick-up coils, O/P trans., field coils, etc., rewound or replaced; fully guaranteed.—Radio Services, Field St., Works, Blackpool R.T.R.A. Service members. Ph. 1250

GALPINS

ELECTRICAL STORES

408 High St., Lewisham, London, S.E.13

Terms strictly cash with order (no C.O.D.)

Telephone: Lee Green 0309. Nr. Lewisham Hospital

ELECTRIC LIGHT CHECK METERS, 200/250 volts 50 cycle 1 phase, 5 amp load 12/6 each, 10 amp 15/-, 20 amp 25/-. Carriage 1/6 on each meter. Useful for garages, subletting, etc.

D.C. MOTORS. Approx. 1/8 h.p. series wound 230 volts 20/- each, 110 volts 17/6 each. Post 1/6. Guaranteed electrically.
Small Universal Motors, useful for sewing machines, cines and a variety of other useful things. 100 volts A.C. or D.C., 25/- each. Post 1/-.

A.C. INDUCTION MOTORS. Approx. 1/16 h.p. Condition as new. Ideal for gramophone motors, etc. 100 volts 50 cycle 1 phase. Price 27/6 each, post 1/-. Both motors above will work off 200/230 volts by using an external series resistance.

"WESTON" Moving Coil Meters, edge type. 2½in. scale, 0 to .3 amps, 30/-; 0 to 2 amps, 27/6; 0 to 60 volts, 27/6; 0 to 150 volts, 27/6; all have F.S.D. of 2 m/amps; 0 to 1 volt, 1 m/a. F.S.D., 35/-; another 3½in. scale reading decibels 50 microamps, F.S.D., 70/-; another 301 model 0 to 3 m/a., 40/-; 0 to 50 m/a., 35/-; 0 to 200 m/a., 35/-.

ERNEST TURNER, moving coil m/amp. meters 2in. scale, 0 to 10 m/a., 0 to 20 m/a., 0 to 50 m/a., 27/6 each; all fully guaranteed. Standard Telephone 3in. scale m/coil meters, calibrated to read 0 to 25, 100 volts movement, 1 m/a., incorporating metal rectifier, 45/- each.

VOLTAGE CHANGER TRANSFORMERS. Auto wound, fully guaranteed. Immediate delivery from stock. 250 watts, 45/-; 500 watts, 70/-; 1,000 watts, 115/-; 2,000 watts, 175/-; 3,000 watts, 235/-; all tapped at 110, 200, 220, 240 volts.

MAINS TRANSFORMERS, for 200/250 volts 50 cy. 1 ph., input 6, 12, and 24 volts at 6/8 amps, 40/- each, post 2/-. Ditto, 3/4 amps output, 30/-, post 1/6. Another 12 volts at 20 amps output, 50/-, post 2/-. Another 12 volts at 30/35 amps output, 75/- each, post 3/6 each.

FERRANTI VOLTAGE REGULATION TRANSFORMERS, with automatic regulator, 7½ kilowatts, oil cooled, 200/260 volts 50 cycles 1 phase, regulation input 80/88 per cent., output 100 per cent., price £22/-/- each. Carriage paid. Ditto, 1½ kilowatts air cooled, £10/-/-. Carriage and packing 10/-.

LARGE TYPE METAL RECTIFIERS. 12 volts 2 amps, 30/-; 12 volts 4 amps, 45/-; 12 volts 6/8 amps, 55/-; 50 volts 1 amp, 35/-; 50 volts 2 amps, 45/-.

EX-G.P.O. PRE-UNISELECTORS, 3 ohm automatic relay operating a 4-way Yaxley switch, fitted with 2 condensers .01, 1½ M.F., new, boxed, 5/- each. G.P.O. Polarised Telegraph Sounders in new condition, 10/- each. G.P.O. Polarised Relays, operating on 10/20 m/amps. coil resistance 230 ohms, 10/- each, as new.

SHORT WAVE H.F. CHOKES, 1/6; H.F. chokes, 1/-; .01 condensers, 4/- per doz. R.I. 3 to 1 L.F. transformers, 6/-; condensers, 1 MF, 1/3; 2 MF, 2/-; 4 MF, 3/6; 10 MF, 5/6 each; smoothing chokes, 20/30 henrys, 80/100 m/amps, 8/6; electrolytic condensers, 80 MF 350 v. wkg., 5/6 each; 500 MF 50 v. wkg., 8/6.

EX-GOVT. ROTARY CONVERTERS, input 12 to 18 volts D.C. at 3½ amps, output 450 volts 60 m/amps. fitted with automatic switching and smoothing, 32/6 each. 2/6 carriage. A few only to clear with brushes and brush caps missing, but otherwise electrically guaranteed, 22/6 each, carriage paid.

LARGE MAINS TRANSFORMERS, by well known makers. Input 110/260 volts, output 0 to 36 volts at 13 amps, with 9 intermediate tappings and 0 to 165 volts at 800 m/amps, with 9 intermediate tappings, £5/10/- each, carriage 7/6.

EX-R.A.F. 10-VALVE CHASSIS (sold for components only). Consisting of 1 2, 150 ohm Mult. Contact Relays, 9 British type Octal Base Valve Holders, 30 Tubular Condensers, ranging from 10 P.F. to 1 M.F. 25/30 Resistances ¼, ½, 1 and 2 watts all mounted on chassis, size 12in. × 8in. × 2in. Components all in good condition. "A real bargain" at 12/6 each, postage 1/6. A few only to clear without the relays, 8/6 each, carriage paid.

G.E.C. MILLIAMP METERS. Moving coil centre, zero reading, 15/0/15 m/amps, 25/- each. Ditto, 30/0/30 m/amps, 25/- each.

World Radio History

HILL & CHURCHILL LTD

BOOKSELLERS

SWANAGE, DORSET

Available from stock :—

Humphrey—"Fundamental Principles of Radio" - - - - - - - - - 12/6
Witts—"Thermionic Valves in Modern Radio Receivers" - - - - - - 10/6
Williams—"Thermionic Valve Circuits" - - - - - - - - - - 12/6
Hague—"A.C. Bridge Methods" - - 30/-
Cohen—"Handbook of Telecommunication" - - - - - - - - - - 30/-
Herbert—"Telegraphy" - - - - 30/-
Herbert & Procter—"Telephony Vol. I" - - - - - - - - - - - 25/-
Herbert & Procter—"Telephony Vol. 2 and Supplement" reprinting.

●

We have a large selection of English and American Books on RADIO and TELECOMMUNICATION.

●

CATALOGUE ON APPLICATION

REWINDS

Armatures, Fields, Transformers, Pick-ups, Vacuum Cleaners, Gram. Motors. Speakers Refitted New Cones & Speech Coils.

All Guaranteed and promptly executed.
Valves, B.V.A. and American, good stocks. Send stamped addressed envelope for list of Radio Spares, and C.O.D. Service.

A.D.S. Co. 261-3-5, Lichfield Road, ASTON, BIRMINGHAM, 6

MORSE CODE TRAINING

There are Candler Morse Code Courses for **BEGINNERS AND OPERATORS.** Send for this Free **"BOOK OF FACTS"** It gives full details concerning all Courses.

THE CANDLER SYSTEM CO.,
(Room 55W), 121 Kingsway, London, W.C.2
Candler System Co., Denver, Colorado, U.S.A.

COVENTRY—RADIO

COMPONENT SPECIALISTS SINCE 1925

"NAPP"

L.F. Chokes, 80 m/a., Standard 6 9
L.F. Chokes, 180 m/a., Super 21/-
Auto Transformer, 90 watt 21/-
Mains Transformer, 350-0-350 volt 80 m/a., 4 volt 4 amp., C.T., 4 volt 2½ amp., shrouded 27/6
Ditto, but unshrouded 24/-
Mains Transformer. 350-0-350 volt 80 m/a. 6.3 volt 3 amp., C.T., 5 volt 2½ amp. shrouded 27/6
Ditto, but unshrouded 24/-

COVENTRY RADIO
191, DUNSTABLE ROAD, LUTON

LOUDSPEAKER repairs.—Our repairs are renowned for quality jobs and satisfaction, at keen competitive prices.—Send yours to L. Cottenham, loudspeaker repair factory, 113, Whetley Lane, Bradford, Yorks. [6387

DEGALLIER'S, Ltd.—Service with a guarantee; if you cannot get your receiver serviced, let American specialists do the job; first-class workmanship only; specialising in Air-King, Belmont, Challenger, Delco, Detrola, de Wald, Emerson, Ferguson, Garod, Hallicrafter, Hammerlund, Lucille, McMurdo Silver, Midwest, Majestic, Pilot, Philco, Scott, Sparton, Stromberg Carlson, R.C.A., etc., also any British or Continental set; due to lack of accommodation our service branches are still dispersed; therefore apply for forwarding instructions before despatching sets; s.a.e. with all enquiries.
DEGALLIER'S, Ltd., 9, Westbourne Court, London, W.2. [6410

WORK WANTED.

RADIOGRAMS and wireless cabinets made to order for home and export.—Box 3033.

ARTIST-DESIGNER, experienced in modern interior design, seeks contact with manufacturers interested in new ideas for cabinet design.—Box 4406. [6513

FOXWINDERS, 74A, East Hill, Wandsworth, S.W.18, are now able to quote you for your light press work, blank form or piercings, also capstan work, milling, turning and guillotining. [6211a

THE name to note for all kinds of radio and electrical metal work to specification, modern rustproof, all shapes and sizes undertaken, and for tropical use; components and sub-assemblies executed to meet recognised wiring and material standards; consultation, advice without obligation.—Write Dept. 23, Sea Rescue Equipment, Ltd., Chiltern Works, Clarendon Rd. Watford, Herts. [5977

TUITION

ENGINEERING careers and qualifications.

BOTH Government and industry have announced and emphasised that young men with technical knowledge and qualifications must receive every chance to rise to the highest positions within their capacity, in post-war engineering and allied industry; write to-day for "The Engineer's Guide to Success"—200 courses free—which shows you how you can become A.M.I.E.E., A.M.I.A.E., A.M.I.Mech.E., A.F.R.Ae.S., etc., and covers all branches in radio, automobile, mechanical, electrical, production, aeronautical, etc.
THE Technological Institute of Great Britain, 82, Temple Bar House, London, E.C.4. [4918

SITUATIONS VACANT

RADIO (Meteorological) mechanics.

VACANCIES exist in the Meteorological Office, Air Ministry, for radio (meteorological) mechanics to maintain radio and radar equipment.
APPLICANTS must possess a knowledge of the fundamental principles of radio and radar and have had practical experience in the use of tools, filing, drilling, hard and soft soldering, wiring and in the maintenance and use of electrical, radio and radar instruments, including cathode ray oscilloscopes.
COMMENCING weekly wages are £6/5 for appointees aged 21 years or over.
APPLICATIONS for appointment should be addressed to the local Employment Exchange or to the Air Ministry (S.2.b.), Cornwall House, Stamford St., London, S.E.1. [6601

APPLICATIONS are invited for the following appointments in an engineering company manufacturing electro/mechanical precision instruments on a batch basis :—
(a) Production engineer to take charge of a department comprising process engineering, jig and tool design, rate fixing, and tool manufacture; salary grade, £900-£1,200 per annum.
(b) Production engineer, to determine and control production methods (machining and assembly) on small precision electro-mechanical instruments; salary grade, £650-£850 per annum.
(c) Production engineer, to determine and control production methods on precision electrical components (e.g., coils, chokes, transformers, motors, generators, etc.); salary grade, £750-£1,000 per annum.
The Company is situated in the London area and employs about 1,500 people. A Pension Scheme is available, and the above appointments are eligible for participation after 12 months' service with the company.
Apply by letter to Box AC.14336, Samson Clarks, 57-61, Mortimer St., London, W.1.

WTD., highly qualified elec. engr., primarily for research into audiometry & allied field; also hearing aid design.—Box 5010.

AN EXTENSIVE RANGE OF HIGH GRADE TRANSFORMERS.

- MAINS TRANSFORMERS 60 and 100 watt, 350-0-350v. 0-4-5v. 0-4-6.3v. Totally enclosed in Metal Shell.
- UNIVERSAL OUTPUT TRANSFORMERS. Suitable for Triode, Pentode, Class B and Q.P.R. Output Stages Fully Tropicallised.
- PRECISION TRANSFORMERS AND CHOKES (LAB RANGE.) Transformers and Chokes in this range are precision built components with a guaranteed tolerance of 2% of rated values. First Grade Materials only are used in their manufacture. Lab range components can be made to individual specifications or supplied from our comprehensive Catalogue.

Simon
SOUND SERVICES

RECORDER HOUSE, 48-50, GEORGE ST., PORTMAN SQUARE, LONDON, W.1.

Cables: SIMSALE, LONDON.
Telegrams: SIMSALE, WESDO, LONDON.

BEETHOVEN ELECTRIC EQUIPMENT LIMITED

Beethoven RADIO

BEETHOVEN WORKS, CHASE ROAD, LONDON, N.W.10

HARTLEY-TURNER

HIGHEST FIDELITY SPEAKER

We much regret that persistent advances in raw materials have compelled us to raise the price of our new speaker to £9. Even so it is remarkable value for money, for those who have already bought it say it is far too cheap. This does not affect our policy, which is always to provide the highest possible quality at the lowest possible cost. The new price is an honest reflection of the cost of manufacture The new reproduction is an honest reflection of the original performance. Send for the descriptive leaflet now.

MODEL 215—£9.

High-grade Push-Pull O.P. Transformer 55/-

H. A. HARTLEY CO. LTD.
132 HAMMERSMITH RD., LONDON, W.6

LONDEX for RELAYS

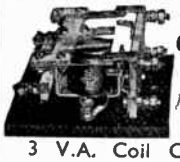

AERIAL CHANGE-OVER RELAY
for Radio Frequency
Type A.E.C.O. 4.

3 V.A. Coil Consumption, especially designed for Transmitters, High Frequency Heating, Amateur Stations, experimenta purposes, etc.

Ask for leaflet 112/WW

LONDEX·LTD SYDenham 6258-9
MANUFACTURERS OF RELAYS
207 · ANERLEY ROAD · LONDON · S.E.20

World Radio History

VALLANCE'S
INTRODUCE:—

to Newcomers to the Ham Bands the **W.F.25D C.W. Transmitter.** Efficient, dependable and ready for immediate C.W. operation. Can be supplied with modulator for phone operation.

SPECIFICATION:

Power Input—25 watts C.W.

Eq. Range—Plug-in coils for 10 to 160 metre Bands. Complete with link output.

Valves—Metal 6L6 xtal controlled oscillator feeding 807. 5U4G Power Supply.

Metering—Grid and Anode of 807. Separate Meters.

Controls—Mains switch with pilot lamp. Stand-by Transmit Switch with indicator lamps. P.A. Tuning Control. Osc. Tuning Control. Jacks for keying in C.O. or 807.

The equipment is complete in beautifully finished grey cellulose case with chromium carrying handles. All components and insulation are of the highest quality, and each instrument is fully tested on the air before delivery. The WF25D is the first of a series of units now in course of production. An outstanding feature of its design is that not only is it a most efficient C.W. Transmitter, but it may ultimately be used as a Driver Unit for the WF150F, 150 watt Power Amplifier, without any alteration. It can, therefore, form the first unit of a high power transmitting outfit, thereby considerably cutting down cost when High Power is required. From Stock. £39/10/-.

The WF150F Power Amplifier, complete in finished grey cellulose double shelf case, with chrome carrying handles. Consists of power supply and P.A. on separate chassis. In conjunction with the WF25D an efficient 150 watt C.W. Transmitter of excellent quality, and pleasing appearance; can be used on the major bands. The P.A. unit is easily disconnected enabling the WF25D to be worked on bands where lower power is necessary. Delivery 6-8 weeks from receipt of order. Price on application.

Specialists in Radio Components and Equipment of Guaranteed Quality.

VALLANCE'S
144, BRIGGATE, LEEDS, 1.

DALY
ELECTROLYTICS

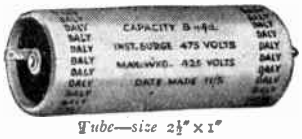

Tube—size 2½" × 1"

Can—size 4½" × 1⅜"

The DALY range covers all requirements

DALY (CONDENSERS) LTD

Condenser Specialists for over 20 years

West Lodge Works, The Green, Ealing, W5

EXPERIENCED radio and television service engineer required, East Anglian district; good references essential; salary £6 per week. Box 5127. [6643

ELECTRONIC technician for development laboratory in West Country; experience with television and allied circuits essential.—Apply Box 4940. [6585

SALES management; a deputy sales manager is required by an engineering company, near London, manufacturing and selling precision instruments; essential qualifications are:—
(1) Engineering training, experience and qualifications.
(2) Experience in controlling a technical sales department and service department operating on a budgetary control basis.
(3) Previous personal association with Government technical and production branches.
(4) Experience in export procedure and foreign markets.
(5) Age 30-40 years.
The initial salary is between £1,000 and £1,500 per annum, and, subject to satisfactory service, the successful candidate will be eligible for a higher executive appointment. Apply by letter to Box AC.14337, Samson Clark, 57-61, Mortimer St., London, W.1.

RADIO engineer with experience of amplifier installations and maintenance, age 25 to 30 commencing salary £5/10 p.w.—Apply British Relay Wireless, Ltd., Aldwych House, W.C.2. [6620

SERVICE and constructional engineer wanted for radio firm in S.E. London; salary £260-£280, depending upon ability.—Apply, giving full details of age and experience, to Box 5137. [6657

RADIO service engineer, unmarried, required for distributor in Ecuador, 4-year contract offered in first instance; salary £40 per month, passage paid.—Applications to Service Manager, Murphy Radio, Ltd., Welwyn Garden City, Herts. [6569

QUALIFIED telecommunications engineer required with experience in l.f. amplification, magnetic receivers, etc., to take charge of research and design of hearing aids; permanent position with excellent prospects for right man.—Box 4897. [6562

SENIOR and junior radio engineers with experience of electrical and mechanical development factory production of domestic receivers; salary according to qualifications and experience.—Apply to Personnel Manager, Airmec, Ltd., Wadsworth Rd., Perivale. [6186

RADIO instructor required for telecommunication mechanic's course; qualified City and Guilds final in radiocommunication or equivalent; lecture, laboratory and workshop experience essential.—Apply School of Radio, University College, Southampton. [6577

LABORATORY assistants required; must have thorough knowledge of radio and electrical test equipment.—Write, giving full particulars of experience and salary required, to Taylor Electrical Instruments, Ltd., 419, Montrose Ave., Slough, Bucks. [6593

ASSISTANT sales manager for old-established firm of radio component makers; position calls for energy, tact and initiative; previous experience in a similar capacity necessary.—Send details of past career, age and salary required, to Box 5138. [6659

PRODUCTION foreman required for small scale acoustic instrument assembly; high-class work, similar experience essential.—Write in first instance, giving age, experience, salary required, Amplivox, Ltd., Abbey Estate Mount Pleasant, Alperton, Middx. [6541

NATIONAL Company require radio service engineers of proved technical ability for permanent situations in various parts of country; opportunities for promotion; write, giving full partics., area preferred, or whether willing to move elsewhere, to Box 5022. [6611

DEVELOPMENT engineer required, West London area; must have industrial experience, preferably of audio frequency amplifiers, and education to at least Inter.B.Sc. standard.—Write, stating age, experience, education and salary required, to Box 4937. [6578

DESIGNER of communications receivers, transmitters, etc., wanted for small lab.; must be able to work right through on own initiative; applicants must give full details of practical experience, state age and salary required; good prospects.—Box 143, Parrs, 121, Kingsway, London, W.C.2. [6596

RADIO engineer.—Large radio firm in London area requires a deputy to the head of its radio laboratory; the engineer concerned should have both theoretical and practical experience, preferably of radio equipment for the Services.—Write, stating age, experience, and salary required, to Box 4654. [6533

FIVE STANDARD INSTRUMENT CASES
BY IMHOF'S

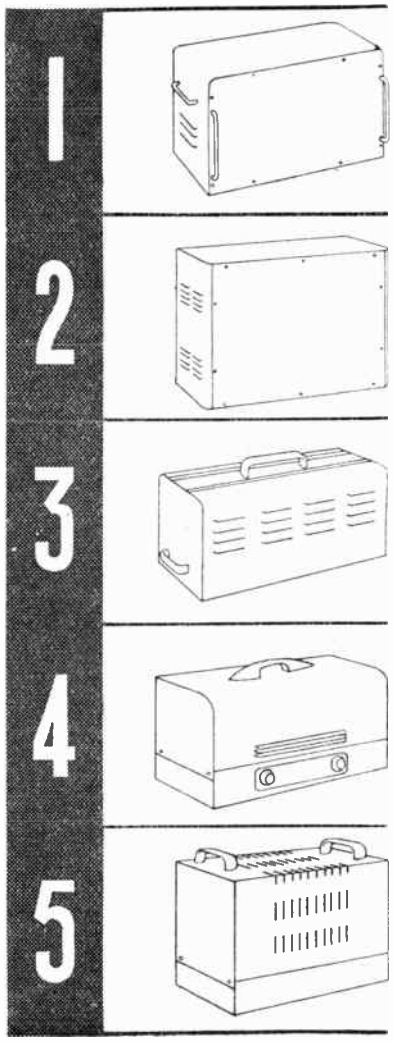

1.	Type 1022A.	21¼" w. × 10¼" d. × 10¼" h.	£2	9	0
	Type 1022B.	21¼" w. × 10¼" d. × 15" h.	£3	5	0
	Type 1022C.	21¼" w. × 10¼" d. × 22" h.	£4	15	0
	Type 1022D.	21¼" w. × 10¼" d. × 30" h.	£6	10	0
2.	Type 1053A.	15¼" w. × 8" d. × 9" h.	£4	15	0
	Type 1053B.	17¼" w. × 9" d. × 10¼" h.	£6	15	0
	Type 1053C.	24" w. × 12" d. × 15" h.	£8	17	6
3.	Type 1007.	21¼" w. × 9¼" d. × 10¼" h.	£6	0	0
4.	Type 1056A.	18" w. × 7" d. × 8¼" h.	£4	15	0
5.	Type 1023.	14" w. × 7" d. × 9¼" h.	£2	15	0

All these standard cases are made in highest quality sheet steel, strongly welded and beautifully finished in light grey, brown, yellow, red or black. Adequate ventilation, pressed feet and front panels fixed by screws in bank bushes are some of the special features. Handles from our standard range can be fitted to type 1022.

ALFRED IMHOF LTD
112/116, NEW OXFORD ST., W.C.1 MUSEUM 5944

World Radio History

RADIOGRAPHIC

The Mail Order Specialists

HAVE GOT THE STUFF

LABGEAR AGENTS

Raymart, Q.C.C., Demco and Hamrod Stockists.

Transceivers, Wavemeters, all Components.

★ Radio Metal Work Specialists.

RADIOGRAPHIC LIMITED

66 OSBORNE ST. GLASGOW

RE-DESIGNED

"Lowther-Voigt"

RADIOGRAMOPHONES

and

QUALITY UNITS

will be available soon

The LOWTHER MANUFACTURING COMPANY

BROMLEY — KENT

"VIBRO-ARC" Engraving Pen

15/- Post Free

For rapid engraving any metal—hard or soft. Operates from 4-6v. Battery or A.C. Transformer giving 6-10 amps.

HOLBOROW & CO.,

8, Mossley Avenue, Wallisdown, Bournemouth.

TRANSFORMERS & COILS TO SPECIFICATION.

MANUFACTURED OR REWOUND.

STANLEY CATTELL LTD

9-11 East Street, TORQUAY, Devon

'Phone: Torquay 2162.

"ENGINEERING OPPORTUNITIES"

This unique handbook shows the easy way to secure A.M.I.Mech.E., A.M.Brit.I.R.E., A.M.I.E.E., City and Guilds, etc.

WE GUARANTEE—"NO PASS—NO FEE."

Details are given of over 150 Diploma courses in all branches of **Civil, Mech., Elec., Motor, Aero., Radio, Television and Production Engineering, Tracing, Building, Govt. Employment, R.A.F. Maths., Matriculation,** etc.

Think of the future and send for your copy at once—**FREE.**

B.I.E.T., 387, SHAKESPEARE HOUSE, 17, STRATFORD PLACE, LONDON, W.1.

APPLICATIONS are invited by a firm near London for the position of television engineer; good up-to-date knowledge of design & development essential; consideration will be given to a qualified television engineer at present an assistant who has the qualifications to take charge of department.—Box 4657.

ENGINEER required to take charge of research and development laboratory engaged in the design of radio test equipment; applicants should have first-class degrees in electrical engineering and at least five years' laboratory experience.—Write, giving full particulars of experience & salary req., Box 4978.

RADIO service engineer required by manufacturer for maintenance work in various parts of the country—only experienced men with good practical and theoretical knowledge should apply; must hold clean driving licence; salary £6, plus bonus, allowances and expenses.—Write, stating age, experience and area preferred.—Box 4660. [6542

DEVELOPMENT engineers reqd. by firm in West London area; applicants must have requisite technical knowledge combined with practical ability to develop communication & test equipment to specifications; pensionable posts, with salary up to £400 p.a.—Apply, stating particulars of age, qualifications and previous experience, to Box 5012. [6606

WEST Africa.—A radio service engineer with wide experience of domestic receivers and preferably with electrical wiring and contracting knowledge, age not over 30; commencing salary from £500 to £600 per annum, according to age and experience; tour of 21 months with leave on full pay; free passages, furnished quarters, medical attendance, separation and children's allowances and membership to pension fund.—Write full particulars to Box 1422, c/o Charles Barker & Sons, Ltd., 31, Budge Row, London, E.C.4.

WORKSHOP assistant wanted for research laboratory of radio firm in S.W. London area, for construction of electronic apparatus good mechanical and electrical experience essential.—Write, giving full details of past experience, to Box 374, L.P.E. 110, St. Martin's Lane, W.C.2, quoting reference "M.1."

DRAUGHTSMEN.—A large North London undertaking require draughtsmen and designer-draughtsmen for their radio department; workshop experience desirable, and preference will be given to men with experience in mechanical design.—Write, stating age, experience & salary req., to Box D6738, A.K. Advertising, 212a, Shaftesbury Av., W.C.2.

CENTRAL REDIFFUSION SERVICES, Ltd., have vacancy for an engineer in London; City and Guilds final in radio communication or equivalent qualification essential; experience of public address work an advantage; commencing salary £375 upwards, according to qualifications.—Apply to Chief Engineer, Carlton House, Lower Regent St., London, S.W.1. [6580

LARGE radio manufacturing firm in S.W. London area have vacancies for technical supervisors (electrical assistant foremen); must have passed grade III of City and Guilds in radio or equivalent, plus good practical experience in the industry.—Reply, giving full details and stating salary required, to Box 345, L.P.E., 110, St. Martin's Lane, W.C.2, quoting reference Z1. [6432

RADIO test engineer required for inspection dept. of important electrical communication company in North London; must be capable of fitting up test gear and carrying out complete tests on commercial receivers and on airborne transmitter-receiver equipments; a sound knowledge of radio engineering and recognised qualifications essential; inclusive commencing salary £6/10 p.w., with good prospects of advancement for keen man.—Write Box D6906, A. K. King, 212a, Shaftesbury Av., W.C.2. [6625

BRITISH BROADCASTING CORPORATION.—Applications are invited from men (British) for two senior posts in the Television Section of Research Department, based near Oxford in first instance. Applicants must be qualified engineers or physicists and must have specialised in telecommunications during their university training; experience in practical television problems, together with a sound theoretical knowledge of the principles involved, is essential; preference will be given to those who have themselves contributed in the field of television research or development; commencing salary will be dependent on qualifications and experience and, subject to favourable report, will rise by annual increments, in one case to £1,360 per annum, and in the other to £1,100 per annum.—Applications, stating age, qualifications and experience, should reach the engineering Establishment Officer, Broadcasting House, London, W.1, not later than January 8th, 1947. [6602

L·R·S

AVOMINOR TEST METERS

A.C./D.C. Universal..... £8 10 0

D.C..... £4 4 0

Regd. Post 10d.

CYLDON ELECTRIC DOOR CHIMES

Beautifully made. Far more pleasant than buzzer or bell. Front door push operates double chimes, back door only single. Universal model for battery or mains with bell transformer (extra). Postage 10d. £2 9 6

HIGH-GRADE 15 JEWEL GENTS WRIST WATCHES

Swiss movement, modern case, best quality leather strap. Regd. Post 9d. £9 14 6

List of Chimes 1d.

ANY OF THE ABOVE SUPPLIED ON EASY TERMS

The LONDON RADIO SUPPLY Co.

(Est. 1925) **BALCOMBE, SUSSEX**

A.F. WINDING & RE-WINDING

TRANSFORMERS, CHOKES, FIELD COILS AND LOUD SPEAKERS

SOUTHERN TRADE SERVICES,

297/299, HIGH ST., CROYDON

Tel.: 4870

Manufacturers of

"TELECRAFT" PRODUCTS

RADIO BATTERY TESTER

Use "Quixo" method of battery testing.

Reliable results. Guaranteed.

Send for interesting leaflet R115 on battery testing.

RUNBAKEN · MANCHESTER 1

A.C.S. RADIO

SPECIALISTS IN AMATEUR AND EXPERIMENTAL SHORT-WAVE EQUIPMENT,

Communications Receivers, Television High quality Amplifiers, Speakers, Aerials, Receiving and Transmitting Valves and Meters, etc.

List "W" free on request to:—

A.C.S. RADIO, 44, Widmore Rd., BROMLEY Kent. *'Phone: RAV 0156*

WARD ROTARY CONVERTERS

For Radio, Neon Signs, Television, Fluorescent Lighting, X-ray, Cinema Equipment and innumerable other applications

We also manufacture:—

Petrol Electric Generating Plants, H.T. Generators, D.C. Motors, Frequency Changers, etc., up to 25 K.V.A.

CHAS. F. WARD

37, WHITE POST LANE, HACKNEY WICK. E.9

Phone: Amherst 1393

World Radio History

RADIO CORNER

(Proprietor, T. R. WILLIAMS)

138 GRAY'S INN RD., LONDON, W.C.1

Terminus 7937

MAIL ORDER. Delivery by return. THE BANNER CHARGER. Type 1/1, 1 amp, ideal for Motorists, a really first-class job. Input 240 v A.C Output 2, 6 or 12 v D.C., at £3. Designed for the motorist who likes to keep his batteries in tip-top condition.

RADIO VALVE MANUAL, giving American and British Valve Equivalents and Data. Price 3/6.

Radio Constructors Manual. Price 3/-.

Radio Tuner Unit Manual. Price 2/6.

Engineers and Electricians Handbook. Price 1/-

Cathode Ray Oscilliscope Manual. Price 2/-.

Radio Reference Book. Price 12/6.

American Radio Valves. Types as under at controlled prices. 45Z5GT, 5Y3G, 1A5GT, 1C5GT, 1Q5GT, 1T5GT, 80G, 35Z5, at 11/- each. 6J5GT 12J5GT, 1H5GT, 12SF5GT, at 9/2 each. 6Q7GT, 12Q7GT, 12SQ7GT, 75G, at 11/7 each. 12SK7GT, 6K7GT, 6K6GT, 6V6GT, 42G, 43G, at 12/10 each. 6A7G, 6A8GT, 6K8GT, at 14/- each. Postage paid. Other types as they become available for distribution.

AMERICAN RADIO SERVICE MANUALS

Volume I. Spartan Emerson.
II. Crosley Belmont. Part I.
III. Crosley Belmont. Part II.
V. Emerson. Part II.
VI. Stewart Warren. FADA.

At 12/6 per Volume, or complete set of six manuals £3 12s. 6d. These Manuals cover the complete range of American Radio Receivers as given and are invaluable and contain all the technical data necessary.

Terms. Cash with Order only. We regret that we are unable to send goods C.O.D

POST-WAR TELEVISION

The advance in Radio Technique offers unlimited opportunities of high pay and secure posts for those Radio Engineers who have had the foresight to become technically qualified. How you can do this quickly and easily in your spare time is fully explained in our unique handbook.

Full details are given of **A.M.I.E.E., A.M.Brit.I.R.E. City & Guilds Exams.,** and particulars of up-to-date courses in **Wireless Engineering, Radio Servicing, Short Waves, Television, Mathematics, etc., etc.**

We Guarantee "NO PASS—NO FEE"

Prepare for to-morrow's opportunities *and post-war competition* by sending for your copy of this very informative 112-page guide NOW—**FREE.**

BRITISH INSTITUTE OF ENGINEERING TECHNOLOGY (Dept. 388)

17, Stratford Place, London, W.1

3 IMPORTANT AMERICAN BOOKS

GHIRADI'S MODERN RADIO SERVICING

GHIRADI'S RADIO TROUBLE-SHOOTER'S HANDBOOK

RADIO HANDBOOK (Published by Editors & Engineers of Los Angeles)

We are importing a limited number of the above. Enquiries to :—

AMERICAN TECHNICAL BOOK CO.
37a, Kensington High Street, London, W.8
WESTern 0781.

BOURNE & HOLLINGSWORTH, Ltd., Oxford St., W.1, in their post-war expansion programme, will very shortly have a vacancy for a radio engineer with sound knowledge of servicing present-day sets and with showroom experience.—Apply by letter to the Staff Manager, giving full details of age, qualifications, etc., and if possible enclosing photograph, which will be returned. [6662

SUDAN GOVERNMENT POSTS AND TELEGRAPHS require one assistant engineer (aeradio) and two engineering inspectors (wireless) for service in the Sudan, aged 28-35, to supervise installation and maintenance of radio transmitters up to 20 kW aerial power, receivers (including high and low-frequency direction finding apparatus), studio gear and diesel-alternators, and to take part in the training of Sudanese.

APPLICANTS must have had wide practical experience of modern high and medium power radio transmitting and receiving apparatus, test equipment, studio gear and modern aerial arrays; knowledge of diesel-generating sets and ac distribution advantageous; City and Guilds certificates in radio-communications desirable.

APPLICANTS for the post of assistant engineer (aeradio) will also be required to have had wide practical experience of modern high-frequency direction finding equipment and radio aids to navigation (radar, etc.).

THE pensionable salary scale applicable is £E.252-276-300-324-360-396-480-540-600 (all biennial increases) 660 (triennial increase). Efficiency bar at £E.480. If efficiency bar passed, scale extended by two biennial and one triennial increases of £E.60 to £E.780 maximum.

APPOINTMENT will either be on probation for permanent pensionable service or on provident fund contract (with security for 7 years after satisfactory completion of probationary period of 2 years) at a starting rate according to age, experience and qualifications; starting salaries proposed: £E.396 for engineering inspectors (wireless) and £E.432 for assistant engineer (aeradio), but higher starting salaries might be offered to specially well qualified candidates; if appointment is on provident fund contract the above rates will be increased by about 17½%.

OUTFIT allowance of £E.40 is payable when contract is signed, provided appointment is at a salary not exceeding £E.600 per annum, or £E.700 on provident fund contract.

COST of living allowance equal to 35% of salary, subject to a maximum of £E.15 per month, is now payable (£E.1 = £1 0s. 6d.); strict medical examination; free passage on appointment.

AT present there is no income tax in the Sudan.

FULLER information.—Papers containing fuller information for candidates are obtainable from the Sudan Agent in London, Wellington House, Buckingham Gate, S.W.1. Mark envelopes "Aeradio" or "Wireless."

CONSULTING service, in course of formation, invites applications from experienced radio and electronic engineers willing to undertake spare time consulting work at home, remuneration by agreement; fullest confidence guaranteed. Applicants should have special knowledge of some branch of radio or electronics.—Write for further details, giving brief summary of qualifications, to Technical Advisory Bureau, 42, Barn Lane, Golborne, Nr. Warrington. [6664

SITUATIONS WANTED

SERVICE engineer, 29, Assoc (Brit.), I.R.E., C. and G., ex-Radar instructor, own car, seeks better situation; pref. Cheshire. —Box 4655. [6534

RADIO engineer, 29, C. & G. III, exp. servicg., keen, seeks position anywh., home, abrd.; fluent French, Spanish, some Germ., Russ.; avail. soon.—Box 4661. [6546

EX-FLT. LT. R.A.F., 34, 11 years ranks, W.E.M., 4 years signal officer, seeks responsible post radio, engineering or communications; sat Brit.I.R.E. exam. Nov., 1946.—Box 5125. [6649

RADIO officer, 1st Class P.M.G. and aircraft tickets, 11 years' marine experience, 4 years radio superintendent and 3 years flying, seeks position on ground, preferably abroad.—Reply Box 4899. [6565

EX-SGT. technician (34), single, 12 yrs.' pre-war industrial and retail technical exp., desires responsible managerial position, intimate with all branches of retail radio, including go-ahead ideas for enlarging service trade. —Box 5072. [6635

EX-RADAR officer, aged 29, married, licensed amateur, A.M.Brit.I.R.E., desires technical-executive position where comprehensive audio and microwave experience can be usefully applied: over 12 years' experience.—Box 5122. [6652

RESOURCEFUL —OF COURSE BULL—

RADIO VALVES, British & American from 5/10.
ALL AT OFFICIAL LIST PRICES.

BRIMAR
20D2, 11D3, 11D5, 10D1, 9D2, 7D5, 1D6, 42, 80, 5B/250A, 7A8, 7B5, 7B6, 7B7, 7B8, 7C5, 7C6, 6AG6, 6K7, 6K8, 6V6, 8D2.

COSSOR
220-1P7, MSpen, MSpenB, MVSPenB, 138PA, 210DG, 220P, 4THA, 0MG, 41MRC, 0M10, 0M4, 210LF, 41MF, MP/Pen, 42MP/Pen, 42-0, TDD, 240QP, 506BU, 48TP, 41MPT, 42PTB, DDL4, 41MTL.

MULLARD
DK32, DF33, DAC32, DL35, TH2, VP2B, SP2, PM12M, TDD2A, PM2HL, PM2A, PM202, PM22A, EM1, EM34, ECH3, ECH35, EK2, EF6, EF9, EF39, EF50, EBC3, EBC33, ECC31, EL2, EL32, EL3, EL33, EL35, EL50, KL35, KK32, KK35, KBC32, TH4B, VP4, VP4A, VP4B, SP4, SP4B, 2D4A, 354V, Pen4VA, PenA4, Pen428, CCH35, TH21C, TH30C, FC13, VP13A, SP13, 2D13c, HL13c, CL33, DW2, 1W4/350, PW4/500, CY1, CY31, UR3c, AZ1, AZ31.

MARCONI-OSRAM
Z21, Z22, W21, ML2, HD24, LP2, P2, KT2, QP21, X41, MS4B, VMS4B, MSP4, VMP4G, W42, KTZ41, MH41, ML4, D41, KT41, PX25, U10, U14, U18/20, GU50, X65, KTW61, KTW63, KTZ63, D63, DH63, DL63, H63, HA2, L63, KT61, KT63, KT66, KT33c, U50, U52, U31, DL74M, U17, U74, KT74, X71M.

MAZDA.
DD41, DD620, DL, H123, HL41, AC/P AC/HL, SP22, D.C.P., P41, VP23, ACVP1, VP41, SP41, VP133, TP22, TP25, TP26, TH41, TP2620, TH2321, TH233, HL23DD, AC/HLDD, HL41DD, HL42DD, HLDD1320, HL133DD, Pen25, Pen45, QP230, QP25, AC2penDD, AC5pen, AC6pen, Pen45DD, Pen46, Pen383, PenDD4020, Pen453DD, CU5, UU6, UU7, UU8, U403.

HIVAC. XSG, XH, XD, XL, XP.

TUNGSRAM
APP4c, APP4G, APV4, AS4120, CB2158, DD13, EF12, EM4, EZ4, HL13, HP13, HP1018, HP1118, HP2018, HP2118, MH1118, MH4105, P2018, SP48, SP4B, HRZ40, LDZ10, 807, PP6E.

AMERICAN
0Z4, 1A4, 1A5, 1A7, 1B4, 1B5, 1C5, 1D7, 1E5, 1E7, 1F4, 1F5, 1F6, 1F7, 1G6, 1H4, 1H5, 1H6, 1J5, 1J6, 1LA4, 1N5, 1R5, 1S5, 1T4, 1T5, 2A6, 2A7, 2B6, 2B7, 3V4, 5V4, 5Z3, 5Z4, 6A8, 6AE6, 6B7, 6B8, 6C6, 6D5, 6D8, 6E6, 6F5, 6F6, 6G6, 6G8, 6H6, 6J7, 6J8, 6K6 6K7, 6K8, 6L5, 6L6, 6L7, 6N7, 6P5, 6Q7, 6R7, 6SC7, 6SF7, 6T7, 6U5-6G5, 6V6, 6X5, 7A7, 7B5, 7B6, 7B7, 7B8, 7C5, 7C6, 7H7, 7Y4, 10, 12A, 12J5, 12Q7, 12SA7, 12SF5, 12SJ7, 14, 15, 18, 20, 22, 25Z4, 26, 31, 32, 33, 34, 35Z5, 37, 38, 42, 46, 48, 49, 50, 53, 55, 57, 59, 71A, 75, 77, 79, 80, 81, 82, 83, 89, 117Z3, 807, 954, 955, 956, 1299A, 9001, 9002, 9003, 9004, 9005,
and 100 more types. Order C.O.D. above listed, numbers or equivalents (subject to stock). Please enquire for any valve you require, even if not listed. We may have it. Old and new types are arriving daily. For Spares, Components, Meters, etc., we refer you to our advert. on page 47 of "Wireless World," December issue. There, please note two corrections. The price for the Lexington Pick-up should be £6 5s.0d. And the line for Z should read of course, ZEAL to serve you. Which reminds us also to wish you

A HAPPY NEW YEAR!

If not yet on our Mailing List, please send a postcard with your name and address in block letters This will ensure a regular receipt of our lists.

SPECIAL OFFERS:

Resistance and Capacity Test Box, a device which facilitates the simple and speedy insertion of a condenser or resistor across another whose goodness is suspected. Price complete, ready for immediate use. **£3 17s. 6d.**

Home Electro-Plating Kit, enables you to nickel plate any article which is electroplatable. Operates from 1.5 volt dry battery. Complete **£1 9s. 6d.**

Order C.O.D. or remit with order plus postage.

J. BULL & SONS (W.W.) 246, HIGH STREET, HARLESDEN, N.W.10

A Mine of INFORMATION

Everything you need in Radio and Electronics is shown in our 111-page catalogue—packed with interesting items by well-known manufacturers including a complete valve range. No job clearance lines whatsoever. A shilling postal order will bring you this catalogue post free.

SEND TO-DAY

BRIGHTON TRADE SERVICES LTD.

63, London Road, Brighton 1, Sussex

Tel.: Brighton 1555.

World Radio History

EX-R.A.F. radar mech. (30), 2 yrs. civilian wireless servicing, Matriculation B.I.E.T. student, good refs., seeks progressive post radio or electronics; travel anywhere.—Box 4652.

EXPERIENCED electronic, radio, television, research development and circuit designer seeks post with prospects, fully qualified engineer, first-class references.—Box 947, Aldridges, 1, Whitefriars St., London, E.C.4.

SIGNALS officer (R.A.F.), 26 yrs., married, requires remunerative and progressive post, ex-app. (R.A.F.), 10 yrs.' experience all R.A.F. radio comms., C. & G. Final standard, first-class administrator and organiser, available March.—Box 4901. [6570

TECHNICAL TRAINING

A.M.I.E.E., City and Guilds, etc., on "No Pass—No Fee" terms; over 95% successes; for full details of modern courses in all branches of electrical technology send for our 112-page handbook, free and post free.—B.I.E.T. (Dept. 388A), 17, Stratford Place, London, W.1 [6270

PATENT AGENTS

A. E. HILL, chartered patent agent, 27, Chancery Lane, London, W.C.2. [4368

BUSINESSES FOR SALE OR WANTED

RADIO and service eng., est. 17 years, main road N. London, accom. avail. 4 rooms, owner now arthritic cripple; £750 all at; genuine offer for good man, personal only; no agents, etc.—Box 5023. [6616

MIDLAND INSTRUMENT CO.

Offer the following ex-Gov. Surplus:—Rectifiers, H.16, 9d.; H.D., 9d.; MBH4, 1/-. Sidlok fuses, 1/-. Signal lamps (red), 1/6. Group boards, 1/-. Conds., 4 mfd., 1/6; 8 mfd., 2/-; 25 v., 25 mfd., 1/-. Pots, 400-ohm., 1/-; .1-meg., 1/6; ½-meg., 1/6. Plugs fitted jacks, 1/9. Yaxley switches, 1/6. Mains, 5-amp. switches, 1/-. Mike trans., 2/6. A.C. relays, 2/6. Sample parcel, one of each above, 20/- (postage 1/-). Hundreds of other Radio and Electronic items: lists, 2d., with s.a.e.

18, HARBORNE PARK ROAD, BIRMINGHAM, 17
Tel.: HARborne 1308 or 2664.

WANTED, wireless, cycle, electrical or similar business, cash waiting.—W., 52, St. Peter's Rd., Earley, Berks. [6658

WANTED to purchase, small, well established electronic instruments or radio components manufacturing company, as going concern.—Box 4663. [6554

PATENTS, ETC.

THE proprietor of British Patent No 556320, entitled Improvements in Television System and Method, offers same for licence or otherwise to ensure its practical working in Great Britain.—Inquiries to Singer, Ehlert, Stern & Carlberg, Chrysler Bldg., New York, 17, N.Y., U.S.A. [6408

BOOKS, INSTRUCTIONS, ETC.

RADIO amateur call book (winter edition), 8/9, post paid; subscription for one year, 30/-, post paid; copies are posted direct from America.—Orders with payment to authorised distributors, Dale Electronics, Ltd., 105, Bolsover St., London, W.1. [6597

WALTER CONDENSERS ARE MADE FOR Life

WALTER INSTRUMENTS, LTD.

GARTH RD., LOWER MORDEN, SURREY
DERWENT 4421. Grams: WALINST, MORDEN, SURREY

C. R. Casson 7a

ERG'S HAVE THE URGE TO GO ABROAD

SPEAKING EXPORTLY...

ERG Resistors have an exceptional electrical specification and performance, with mechanical strength.

High-grade Vitreous Enamels used on our Tropical Resistors give long life, and definitely assist in the trouble-free manufacture and performance of Radio Receivers, Television and Test Equipment.

ERG Resistors are processed up to the highest Service Standards at a competitive Price.

ERG INDUSTRIAL CORPORATION LTD.
SALES OFFICE: 10 PORTMAN SQUARE, LONDON, W.1 TELE.: WELBECK 8114/5

ERG

STABLE up to 1%

Resistors produced by the cracked carbon process remain stable to ± 1% of initial value.

★ Tolerances ± 1% ± 2% ± 5%

Low temperature co-efficient.

Welwyn carbon resistor

WELWYN ELECTRICAL LABORATORIES LTD.
Welwyn Garden City, Herts. Telephone: Welwyn Garden 3816-8

RADIO-AID

A Sign of the times!

MODERN ELECTRONIC TEST EQUIPMENT FOR MODERN ENGINEERS

Full details on request:

RADIO-AID LTD.
29 Market Street, Watford, Herts.
Telephone: Watford 5088

5 mmf/ft

NEW LOW LEVELS in capacity and attenuation of CO-AX Cables mean new possibilities in electronic equipment design both for the war effort and for the post-war electronic age.

BASICALLY BETTER AIR-SPACED

CO-AX LOW LOSS CABLES

TRANSRADIO LTD. 16 THE HIGHWAY · BEACONSFIELD · 4 · BUCKS

Superspeed SPECIAL

CORED SOLDER

A.I.D. APPROVED

H. J. ENTHOVEN & SONS LTD.
230 THORNTON ROAD, WEST CROYDON, SURREY
THOrnton Heath 2462

Printed in Great Britain for the Publishers, Iliffe and Sons Ltd., Dorset House, Stamford Street, London, S.E.1, by The Cornwall Press Ltd., Paris Garden, Stamford Street London, S.E.1. "Wireless World" can be obtained abroad from the following—Australia and New Zealand: Gordon & Gotch, Ltd. India: A. H. Wheeler & Co. Canada: Imperial News Co.; Gordon & Gotch, Ltd. South Africa: Central News Agency, Ltd.; William Dawson & Sons (S.A.), Ltd. United States: The International News Co.

World Radio History

Look inside most of today's receivers to see the industry's choice for capacitor dependability

Facts are inescapable . . . where capacitors are concerned it pays to go with the crowd—especially when goodwill is so easily dependent on trouble-free long life. Follow the industry . . . use always Hunt Capacitors—the reliable tested product of the specialists in nothing but capacitors—in every form, type and price.

HUNTS CAPACITORS
TRADE MARK

A. H. HUNT LTD. • LONDON, S.W.18 • *Established 1901*

World Radio History

THE FINEST CORED SOLDER IN THE WORLD

NEW SIZE

FOR SERVICE ENGINEERS AND RADIO AMATEURS

NOTE THESE ADVANTAGES

1 Ersin Multicore Solder wire pulls out as required without becoming tangled. Can be carried easily in service engineer's kit.

2 Windows enable user to see when contents are nearly exhausted.

3 Available in four specifications at fixed prices. Sold by length instead of weight.

Only Ersin Multicore Solder contains 3 cores of extra active non-corrosive Ersin Flux. No extra flux required. Ensures extra rapid soldering with freedom from dry or H.R. joints.

Available from leading radio shops. In case of difficulty write to:

NEW SIZE I CARTON
Workshop Size

Catalogue Ref No.	Alloy Tin Lead	S.W.G.	Approx. length per carton	List price per carton (subject) s. d.
C 16014	60 40	14	56 feet	6 0
C 16018	60 40	18	151 feet	6 9
C 14013	40 60	13	36 feet	4 10
C 14016	40 60	16	83 feet	5 3

MULTICORE SOLDERS LIMITED

MELLIER HOUSE, ALBEMARLE STREET, LONDON, W.1. Tel.: REGent 1411

World Radio History